Fabrikant van **katalysatoren** en **deeltjesfilters**

AUDI, SEAT, VOLKSWAGEN

37936

PK900 | OBD | 540 | 3.70

Originele ref.:

1K0254200HX, 1K0254211X
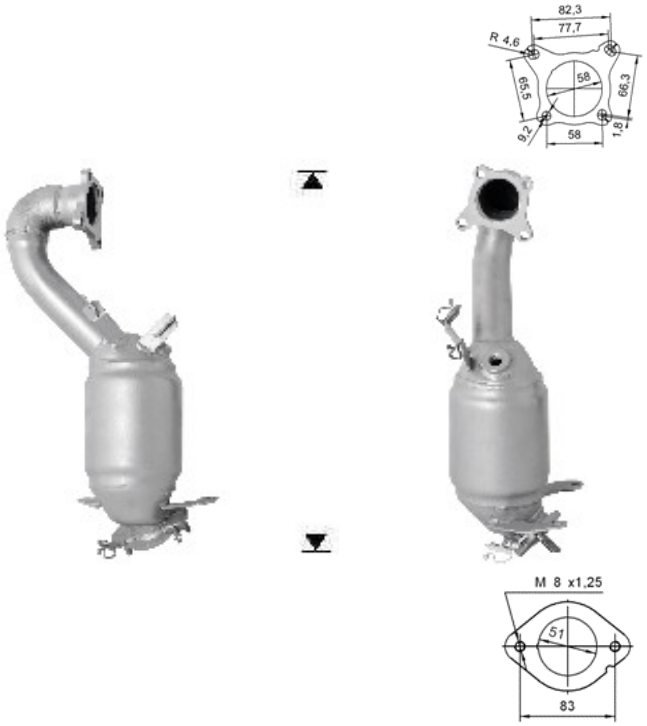
MERK	MODEL	DATUM
AUDI	A3 1.4i TFSI 16V 1390 cc 92 Kw / 125 cv CAXC, CMSA	9/07>12/08
SEAT	ALTEA 1.4i TSI 16V 1390 cc 92 Kw / 125 cv CAXC	11/07>9/10
SEAT	LEON 1.4i TSI 16V 1390 cc 92 Kw / 125 cv CAXC	11/07>9/10
SEAT	TOLEDO 1.4i TSI 16V 1390 cc 92 Kw / 125 cv CAXC	11/07>
VOLKSWAGEN	**EOS 1.4i TSI 16V 1390 cc 90 Kw / 122 cv CAXA**	11/07>
VOLKSWAGEN	GOLF PLUS 1.4i TSI 16V 1390 cc 90 Kw / 122 cv CAXA	11/07>12/08
VOLKSWAGEN	GOLF V 1.4i TSI 16V 1390 cc 90 Kw / 122 cv CAXA	6/07>7/09
VOLKSWAGEN	JETTA 1.4i TSI 16V 1390 cc 90 Kw / 122 cv CAXA	7/07>6/09
VOLKSWAGEN	PASSAT V 1.4i TSI 16V 1390 cc 90 Kw / 122 cv CAXA	5/07>11/10