TOYOTA

95175D

PK942 | OBD | mm. 2210 | Kg. 19.80 | (1) | 2 | Euro 5

Originele ref.:

1741026430, 1741026431, 1741026432, 1741026440, 1741026441, 1741026442
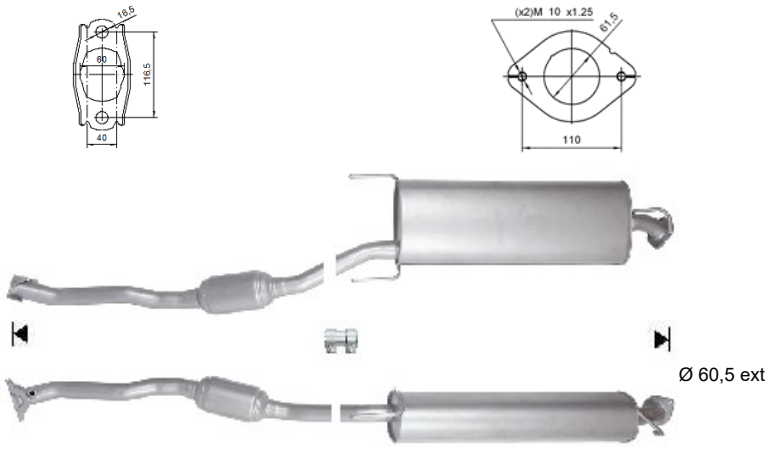
MERK	MODEL		DATUM
TOYOTA	**RAV 4 2.2TD D4D 2231 cc 98 Kw / 133 cv 2ADFTV**	(1)	12/08>9/15
TOYOTA	RAV 4 2.2TD D4D DPF 2231 cc 98 Kw / 133 cv 2ADFTV		2/10>9/15
TOYOTA	RAV 4 2.2TD D4D 2231 cc 100 Kw / 136 cv 2ADFTV	(1)	12/08>9/15
TOYOTA	RAV 4 2.2TD D4D DPF 2231 cc 100 Kw / 136 cv 2ADFTV		2/10>9/15
TOYOTA	RAV 4 2.2TD D4D 2231 cc 110 Kw / 150 cv 2ADFTV	(1)	12/08>9/15
TOYOTA	RAV 4 2.2TD D4D DPF 2231 cc 110 Kw / 150 cv 2ADFTV		2/10>9/15