TOYOTA

95184

PK550 | OBD | mm. 2325 | Kg. 10.60 | Euro 5 (1) | Euro 6

Originele ref.:

1741037570, 1741037572
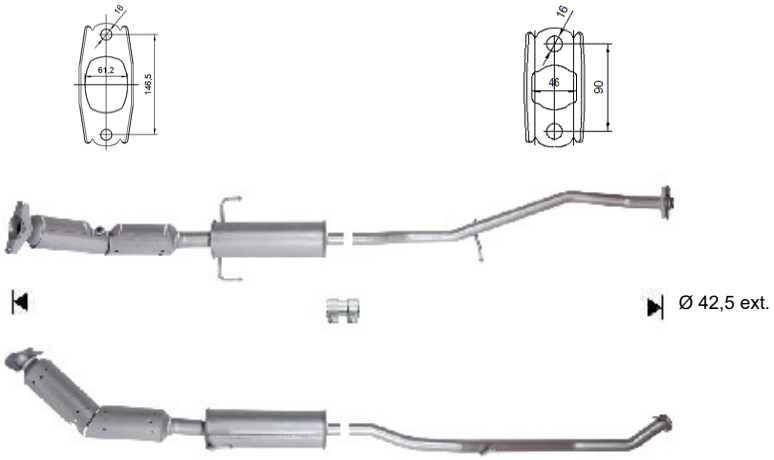
MERK	MODEL		DATUM
TOYOTA	**PRIUS + 1.8i 16V Full Hybrid 1798 cc 100 Kw / 136 cv 2ZRFXE**	(1)	3/12>10/14
TOYOTA	PRIUS + 1.8i 16V Full Hybrid 1798 cc 100 Kw / 136 cv 2ZRFXE		11/14>8/21