SUBARU, TOYOTA

# 95169

PK1082 | OBD | mm. 430 | Kg. 4.50 | 1 | Euro 5

Originele ref.:

2505147070
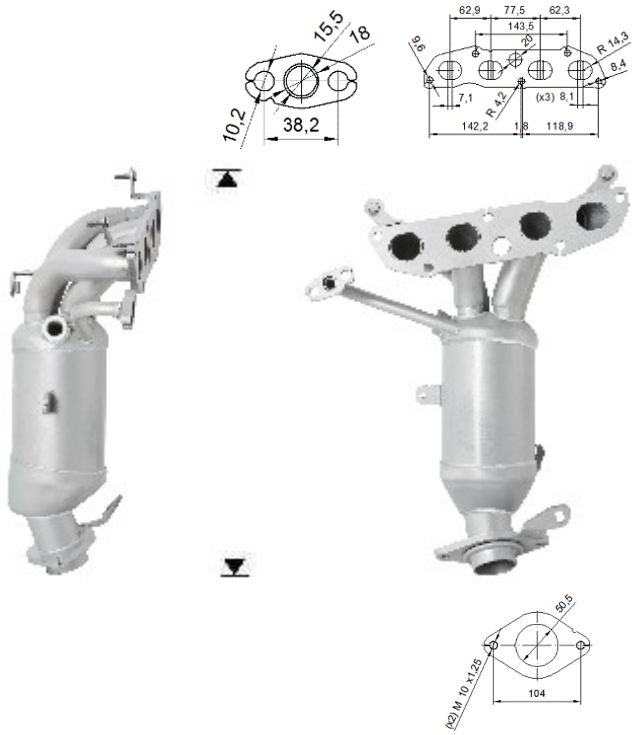
| MERK | MODEL | DATUM |
|---|---|---|
| SUBARU | TREZIA 1.3i VVTi 16V 1329 cc 73 Kw / 99 cv 1NRFE | 1/11> |
| **TOYOTA** | AURIS 1.3i VVTi 16V 1329 cc 73 Kw / 99 cv 1NRFE | 10/12>4/15 |
| **TOYOTA** | **COROLLA 1.3i VVTi 16V 1329 cc 73 Kw / 99 cv 1NRFE** | 6/13>4/16 |
| **TOYOTA** | VERSO 1.3i VVTi 16V 1329 cc 73 Kw / 99 cv 1NRFE | 11/10>3/15 |
| **TOYOTA** | YARIS 1.3i VVTi 16V 1329 cc 73 Kw / 99 cv 1NRFE | 7/11>6/14 |