Fabrikant van **katalysatoren** en **deeltjesfilters**

RENAULT

30193D

PK820 | OBD | 450 mm. | 5.70 Kg.

Originele ref.:

8200574897, 8200869197
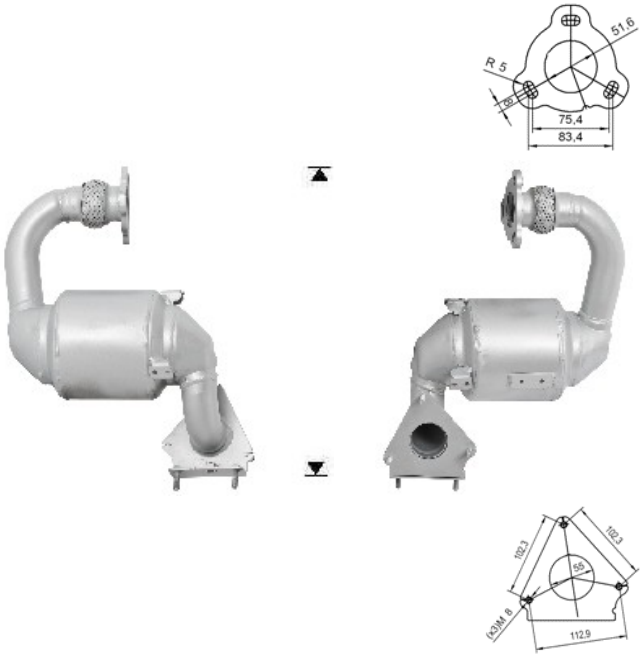
MERK	MODEL	DATUM
RENAULT	ESPACE 2.0TD DCI 16V 1995 cc 96 Kw / 131 cv M9R	3/06>
RENAULT	ESPACE 2.0TD DCI 16V DPF 1995 cc 96 Kw / 131 cv M9R	3/06>
RENAULT	ESPACE 2.0TD DCI 16V 1995 cc 110 Kw / 150 cv M9R	3/06>
RENAULT	ESPACE 2.0TD DCI 16V DPF 1995 cc 110 Kw / 150 cv M9R	3/06>
RENAULT	ESPACE 2.0TD DCI 16V 1995 cc 127 Kw / 173 cv M9R	3/06>
RENAULT	ESPACE 2.0TD DCI 16V DPF 1995 cc 127 Kw / 173 cv M9R	3/06>
RENAULT	LAGUNA 2.0TD DCI 16V 1995 cc 127 Kw / 173 cv M9R	7/05>
RENAULT	LAGUNA 2.0TD DCI 16V DPF 1995 cc 127 Kw / 173 cv M9R	9/05>
RENAULT	MEGANE 2.0TD DCI 16V DPF 1995 cc 110 Kw / 150 cv M9R	9/05>
RENAULT	MEGANE 2.0TD DCI 16V DPF 1995 cc 127 Kw / 173 cv M9R	8/05>
RENAULT	SCENIC 2.0TD DCI 16V DPF 1995 cc 110 Kw / 150 cv M9R	1/06>
RENAULT	**VEL SATIS 2.0TD DCI 16V DPF 1995 cc 110 Kw / 150 cv M9R**	4/06>
RENAULT	VEL SATIS 2.0TD DCI 16V DPF 1995 cc 127 Kw / 173 cv M9R	8/05>