LEXUS, TOYOTA

69010

KIT KIT PK1187 | OBD | mm. 1280 | Kg. 8.85 | Euro 5 | Euro 6 (1)

Originele ref.:

174100T510, 1741037520
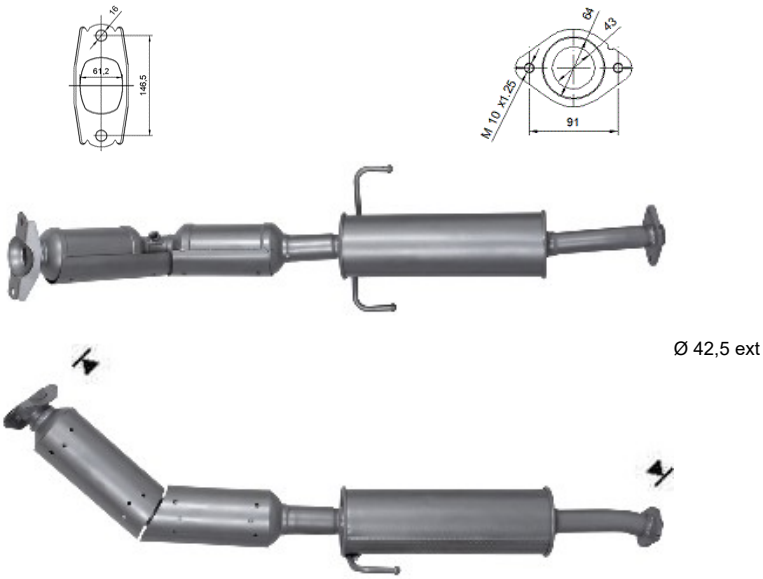
MERK	MODEL		DATUM
LEXUS	**CT200H 1.8i VVTi 16V Full Hybrid 1798 cc 100 Kw / 136 cv 2ZRFXE**	(1)	12/12>6/20
LEXUS	CT200H 1.8i VVTi 16V Full Hybrid 1798 cc 100 Kw / 136 cv 5ZRFXE		12/10>12/13
LEXUS	CT200H 1.8i VVTi 16V Full Hybrid 1798 cc 100 Kw / 136 cv 2ZRFXE		12/10>12/12
TOYOTA	AURIS 1.8i 16V Full Hybrid 1798 cc 100 Kw / 136 cv 2ZRFXE	(1)	10/12>10/18