Fabrikant van **katalysatoren** en **deeltjesfilters**

FORD

20407

PK142 | OBD | 490 mm. | 5.60 Kg.

Originele ref.:

1113277, 1839937
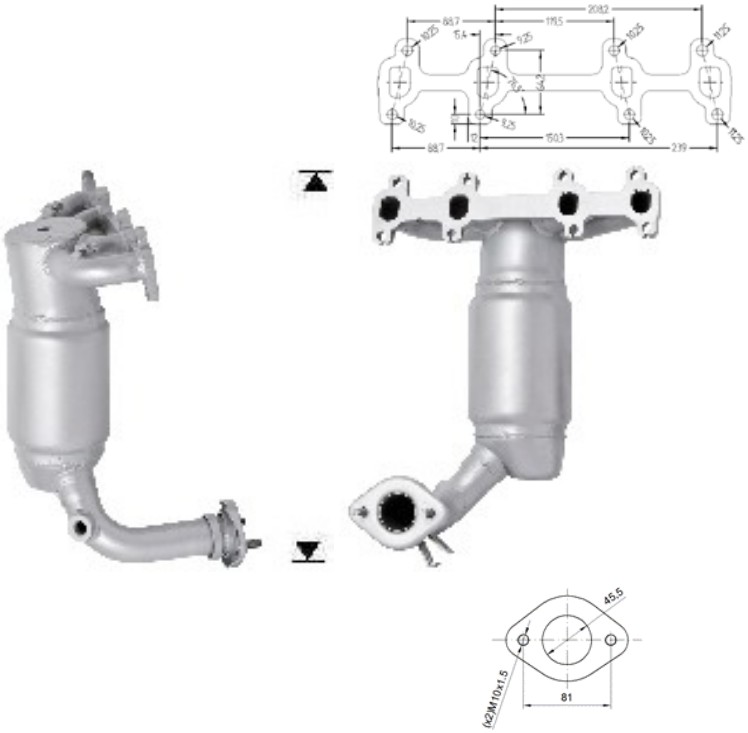
MERK	MODEL	DATUM
FORD	**FIESTA 1.3i 1299 cc 44 Kw / 60 cv**	8/00>10/02
FORD	KA 1.3i 1299 cc 44 Kw / 60 cv	8/00>10/02