ALFA ROMEO, FIAT, OPEL, SAAB

# 84046D

PK744 | OBD | mm. 270 | Kg. 2.40 | 1

Originele ref.:

51767236, 51780156, 55187620, 5854236, 60802074, 60802075

| MERK | MODEL | DATUM |
|---|---|---|
| ALFA ROMEO | 159 1.9TD JTD DPF 1910 cc 100 Kw / 136 cv 939A8000 | 7/05>12/10 |
| ALFA ROMEO | 159 1.9TD JTD DPF 1910 cc 110 Kw / 150 cv 939A2000 | 7/05>11/06 |
| **FIAT** | **CROMA 1.9TD JTD DPF 1910 cc 84 Kw / 115 cv 939A7000** | 6/05>10/07 |
| **FIAT** | CROMA 1.9TD JTD DPF 1910 cc 88 Kw / 120 cv 939A1000 | 6/05>10/07 |
| **FIAT** | CROMA 1.9TD JTD DPF 1910 cc 100 Kw / 136 cv 939A8000 | 6/05>1/08 |
| **FIAT** | CROMA 1.9TD JTD DPF 1910 cc 110 Kw / 150 cv 939A2000 | 6/05>1/08 |
| **FIAT** | GRANDE PUNTO 1.9TD JTD DPF 1910 cc 84 Kw / 115 cv 939A7000 | 10/05>11/07 |
| **FIAT** | GRANDE PUNTO 1.9TD JTD DPF 1910 cc 88 Kw / 120 cv 939A1000 | 10/05>11/07 |
| **FIAT** | GRANDE PUNTO 1.9TD JTD DPF 1910 cc 95 Kw / 129 cv 199A5000 | 10/05>11/07 |
| OPEL | ASTRA 1.9TD CDTI DPF 1910 cc 88 Kw / 120 cv Z19DTJ | 3/04>12/10 |
| OPEL | ASTRA 1.9TD CDTI DPF 1910 cc 110 Kw / 150 cv Z19DTH | 3/04>12/10 |
| OPEL | SIGNUM 1.9TD CDTI DPF 1910 cc 110 Kw / 150 cv Z19DTH | 4/04>11/08 |
| OPEL | VECTRA 1.9TD CDTI DPF 1910 cc 110 Kw / 150 cv Z19DTH | 4/04>2/09 |
| OPEL | ZAFIRA 1.9TD CDTI DPF 1910 cc 110 Kw / 150 cv Z19DTH | 7/05>2/09 |
| SAAB | 9-3 1.9TD TID DPF 1910 cc 110 Kw / 150 cv Z19DTH | 6/04>9/10 |
| SAAB | 9-5 1.9TD TID DPF 1910 cc 110 Kw / 150 cv Z19DTH | 11/05>7/09 |
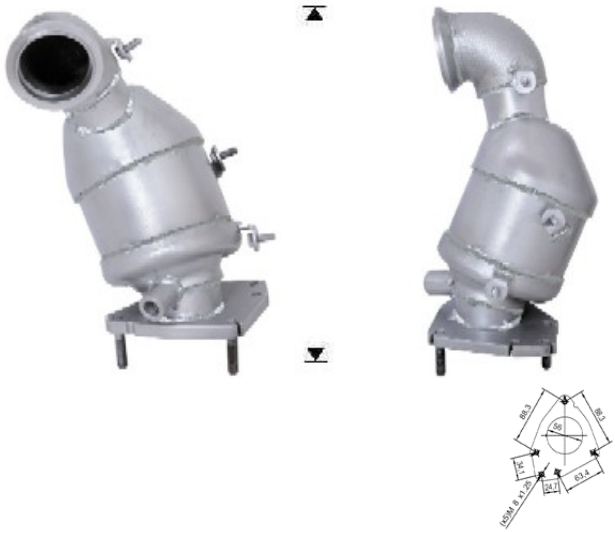
Ø 56,9 ext.