Fabrikant van **katalysatoren** en **deeltjesfilters**

DAIHATSU, TOYOTA

95125

PK1082 | OBD | mm. 480 | Kg. 4.45 | 1 (1) | Euro 5

Originele ref.:
2505147010

MERK	MODEL		DATUM
DAIHATSU	**CHARADE 1.3i VVTI 16V 1329 cc 73 Kw / 99 cv 1NRFE**		6/11>
TOYOTA	AURIS 1.3i VVTI 16V 1329 cc 74 Kw / 101 cv 1NRFE	(1)	9/08>
TOYOTA	COROLLA 1.3i VVTI 16V 1329 cc 74 Kw / 101 cv 1NRFE	(1)	12/08>
TOYOTA	URBAN CRUISER 1.3i VVTI 16V 1329 cc 74 Kw / 101 cv 1NRFE	(1)	1/09>
TOYOTA	YARIS 1.3i VVTI 16V 1329 cc 74 Kw / 101 cv 1NRFE	(1)	11/08>

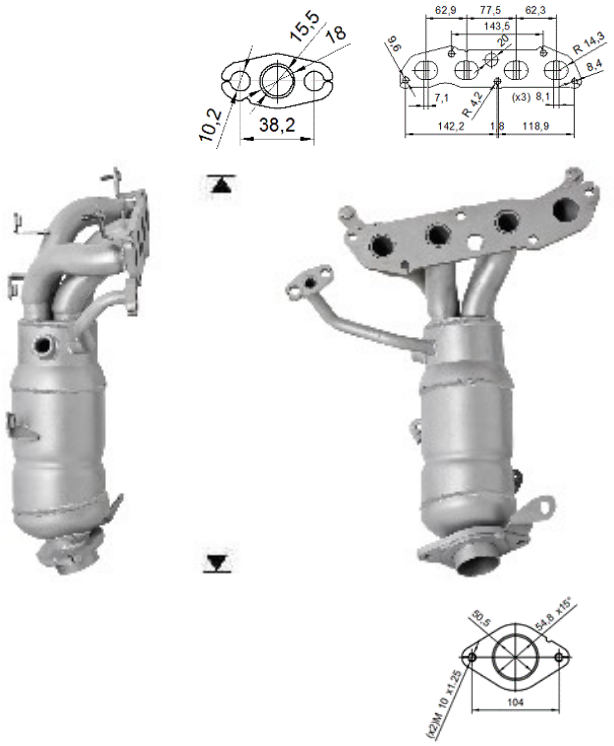

Ø 48.8 ext