BMW

45293

PK1302 | OBD | 610 | 4.10 | (1) | Euro 5 | Euro 6

Originele ref.:
18307618670
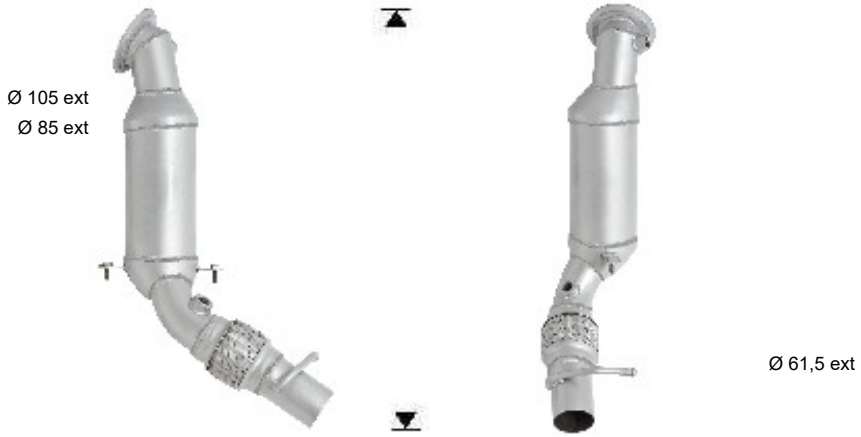
MERK	MODEL		DATUM
BMW	**114i 1.6i 16V 1598 cc 75 Kw / 102 cv N13B16A (N13) F20, F21**	(1)	11/11>2/13
BMW	114i 1.6i 16V 1598 cc 75 Kw / 102 cv N13B16A (N13) F20, F21		2/13>
BMW	116i 1.6i 16V 1598 cc 100 Kw / 136 cv N13B16A (N13) F20, F21		2/13>2/15
BMW	116i 1.6i 16V 1598 cc 100 Kw / 136 cv N13B16A (N13) F20, F21	(1)	7/11>2/13
BMW	118i 1.6i 16V 1598 cc 100 Kw / 136 cv N13B16A (N13) F20, F21		3/15>
BMW	118i 1.6i 16V 1598 cc 125 Kw / 170 cv N13B16A (N13) F20, F21		2/13>2/15
BMW	120i 1.6i 16V 1598 cc 130 Kw / 177 cv N13B16A (N13) F20, F21		3/15>
BMW	316i 1.6 16V 1598 cc 100 Kw / 136 cv N13B16A (N13) F30, F31		2/13>9/15
BMW	316i 1.6 16V 1598 cc 100 Kw / 136 cv N13B16A (N13) F30, F31	(1)	3/12>2/13
BMW	320i 1.6 16V 1598 cc 125 Kw / 170 cv N13B16A (N13) F30, F31		9/12>