AUDI

42264

PK1199 | OBD | mm. 440 | Kg. 3.20 | Euro 5 | Euro 6 (1)

Originele ref.:

8K0254200PX, 8K0254202CX
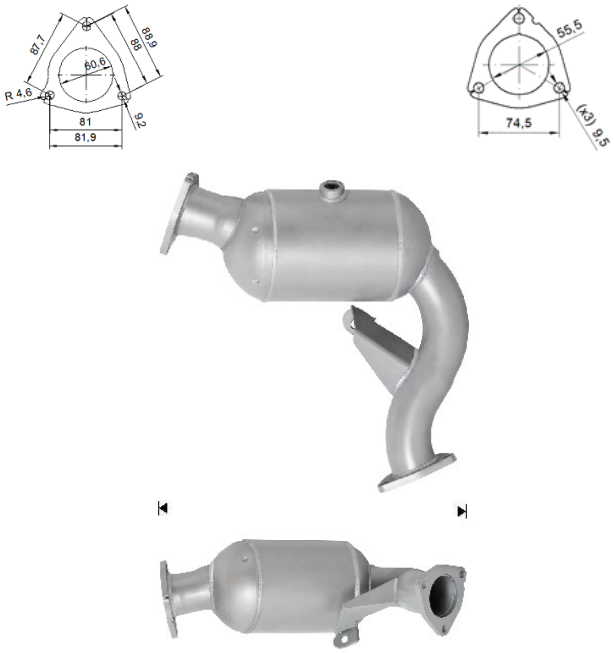
MERK	MODEL	DATUM
AUDI	A4 Quattro 3.0i TFSI V6 24V 2995 cc 200 Kw / 272 cv CMUA	9/12>6/14
AUDI	A4 Quattro 3.0i TFSI V6 24V 2995 cc 245 Kw / 333 cv CGWC, CGXC, CTUB	3/09>12/15
AUDI	A5 Quattro 3.0i TFSI V6 24V 2995 cc 200 Kw / 272 cv CMUA/CHMB	12/11>6/14
AUDI	A5 Quattro 3.0i TFSI V6 24V 2995 cc 245 Kw / 333 cv CGWC, CGXC, CTUB	5/09>6/14
AUDI	Q5 3.0i TFSI V6 24V 2995 cc 200 Kw / 272 cv CTUC, CTVA	6/12>
AUDI	**Q5 3.0i TFSI V6 24V 2995 cc 260 Kw / 354 cv CTXA, CTUD** (1)	6/12>