AUDI

42275

PK1406 | OBD | mm. 360 | Kg. 3.40 | Euro 6

Originele ref.:

8W0254252HX, 8W0254252X, 8W0254253X
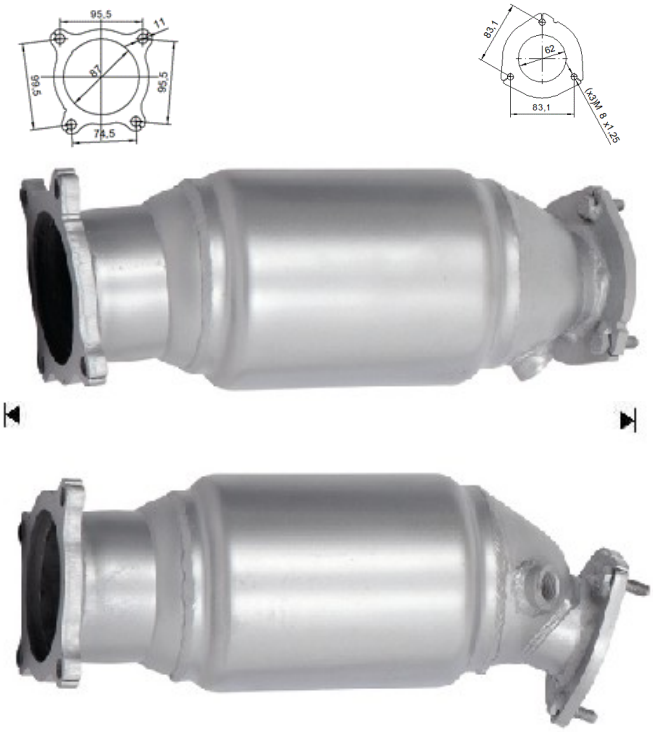
MERK	MODEL	DATUM
AUDI	A4 2.0i TFSI 16V 1984 cc 140 Kw / 190 cv CVKB	5/15>7/19
AUDI	A4 40 2.0TFSI 16V Mild Hybrid 1984 cc 140 Kw / 190 cv DEMA, DKYA	5/17>
AUDI	A4 2.0i TFSI 16V 1984 cc 183 Kw / 249 cv CYRC	11/15>11/19
AUDI	A4 2.0i TFSI 16V 1984 cc 185 Kw / 252 cv CYRB	8/15>11/19
AUDI	A4 Quattro 2.0i TFSI 16V 1984 cc 183 Kw / 249 cv CYRC	11/15>11/19
AUDI	A4 Quattro 2.0i TFSI 16V 1984 cc 185 Kw / 252 cv CYRB	5/15>11/19
AUDI	A5 35 2.0i TFSI 16V 1984 cc 110 Kw / 150 cv CVKC, DEMB	8/18>
AUDI	A5 2.0i TFSI 16V 1984 cc 140 Kw / 190 cv CVKB	8/16>
AUDI	A5 40 2.0TFSI 16V Mild Hybrid 1984 cc 140 Kw / 190 cv DEMA, DKYA	5/17>
AUDI	A5 45 2.0TFSI 16V Mild Hybrid 1984 cc 180 Kw / 245 cv DKNA	7/18>2/20
AUDI	A5 2.0i TFSI 16V 1984 cc 185 Kw / 252 cv CYRB	11/16>2/20
AUDI	**A5 2.0i TFSI 16V Mild Hybrid 1984 cc 185 Kw / 252 cv DDWA**	7/18>
AUDI	A5 Quattro 45 2.0TFSI 16V Mild Hybrid 1984 cc 180 Kw / 245 cv DKNA	7/18>
AUDI	A5 Quattro 2.0i TFSI 16V 1984 cc 183 Kw / 249 cv CYRC	6/16>2/20
AUDI	A5 Quattro 2.0i TFSI 16V 1984 cc 185 Kw / 252 cv CYMC, CYRB	6/16>
AUDI	A5 Quattro 2.0i TFSI 16V Mild Hybrid 1984 cc 185 Kw / 252 cv DDWA, DLHB	5/17>2/20