AUDI

42267

PK1306 | OBD | 570 | 3.95 | (1)

Originele ref.:

8K0254250QX, 8K0254252RX, 8K0254253EX
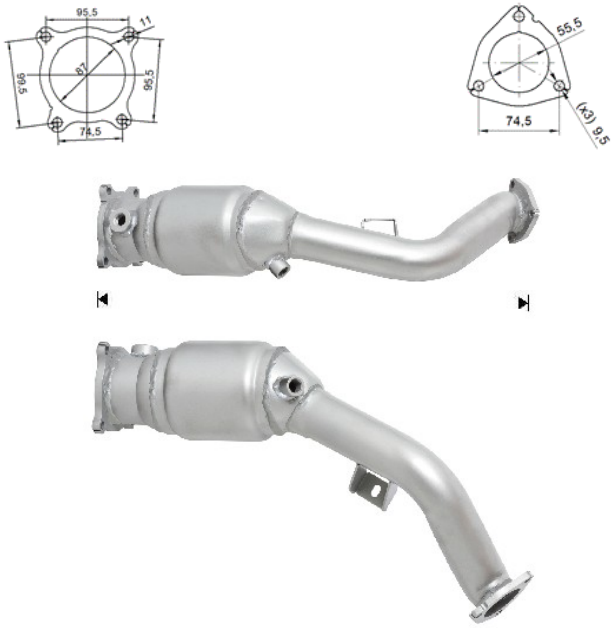
MERK	MODEL		DATUM
AUDI	A4 1.8i TFSI 16V 1798 cc 88 Kw / 120 cv CABA, CDHA	(1)	1/08>3/12
AUDI	A4 1.8i TFSI 16V 1798 cc 118 Kw / 160 cv CABB		11/07>3/08
AUDI	A4 1.8i TFSI 16V 1798 cc 118 Kw / 160 cv CABB, CDHB	(1)	3/08>3/12
AUDI	A4 Quattro 1.8i TFSI 16V 1798 cc 118 Kw / 160 cv CDHB	(1)	6/08>3/12
AUDI	**A5 1.8i TFSI 16V 1798 cc 118 Kw / 160 cv CDHB**	(1)	5/09>3/12
AUDI	A5 1.8i TFSI 16V 1798 cc 125 Kw / 170 cv CABD		11/07>3/08
AUDI	A5 1.8i TFSI 16V 1798 cc 125 Kw / 170 cv CABD	(1)	3/08>3/12