AUDI

42239D

PK010 | OBD | 430 | 2.90

Originele ref.:
8E0254201DX
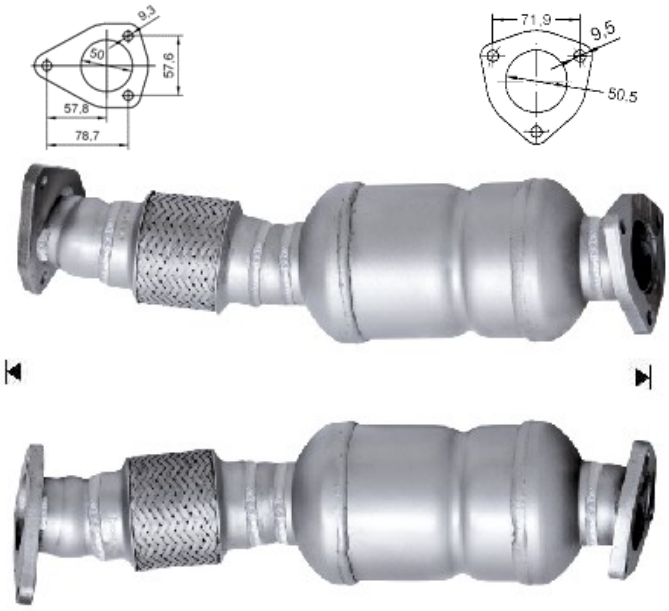
MERK	MODEL	DATUM
AUDI	A4 1.9TDI 1896 cc 85 Kw / 116 cv BKE	6/04>11/05
AUDI	A4 1.9TDI 1896 cc 85 Kw / 116 cv BRB	11/05>6/08
AUDI	A4 2.0TDI 1968 cc 89 Kw / 121 cv BVG	1/06>9/06
AUDI	A4 2.0TDI 1968 cc 93 Kw / 126 cv BVF	11/05>11/06
AUDI	A4 2.0TDI 1968 cc 100 Kw / 136 cv BNA	11/04>11/05
AUDI	A4 2.0TDI 1968 cc 100 Kw / 136 cv BRF	11/05>6/08
AUDI	A4 2.0TDI 1968 cc 103 Kw / 140 cv BLB	11/04>11/05
AUDI	**A4 2.0TDI 1968 cc 103 Kw / 140 cv BPW**	11/04>6/08
AUDI	A4 2.0TDI 1968 cc 103 Kw / 140 cv BRE	10/05>6/08
AUDI	A4 Quattro 2.0TDI 1968 cc 103 Kw / 140 cv BPW	11/04>6/08
AUDI	A6 2.0TDI 1968 cc 89 Kw / 121 cv BVG	9/05>6/06
AUDI	A6 2.0TDI 1968 cc 100 Kw / 136 cv BNA	7/04>11/05
AUDI	A6 2.0TDI 1968 cc 100 Kw / 136 cv BRF	6/05>9/08
AUDI	A6 2.0TDI 1968 cc 103 Kw / 140 cv BLB	7/04>11/05
AUDI	A6 2.0TDI 1968 cc 103 Kw / 140 cv BRE	6/05>9/08