MITSUBISHI

FD1102

PK1410 | OBD | 830 | 7.20 | Euro 5

Originele ref.:

1583A056, 1583A080
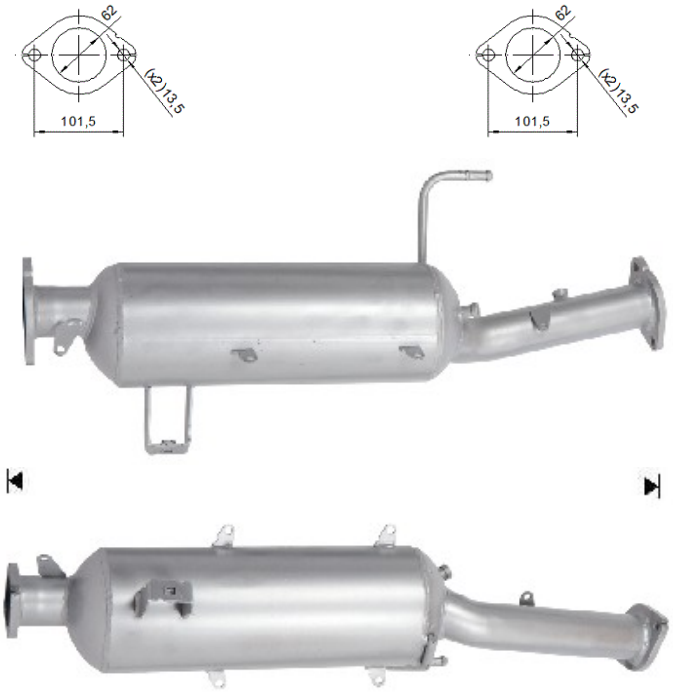
MERK	MODEL	DATUM
MITSUBISHI	MONTERO 3.2TD DID DPF 3200 cc 118 Kw / 160 cv 4M41	9/08>5/11
MITSUBISHI	MONTERO 3.2TD DID DPF 3200 cc 125 Kw / 170 cv 4M41	9/08>5/15
MITSUBISHI	MONTERO 3.2TD DID DPF 3200 cc 140 Kw / 190 cv 4M41	9/08>5/15
MITSUBISHI	MONTERO 3.2TD DID DPF 3200 cc 147 Kw / 200 cv 4M41	1/09>5/15
MITSUBISHI	PAJERO 3.2TD DID DPF 3200 cc 118 Kw / 160 cv 4M41	9/08>5/11
MITSUBISHI	PAJERO 3.2TD DID DPF 3200 cc 125 Kw / 170 cv 4M41	9/08>5/15
MITSUBISHI	PAJERO 3.2TD DID DPF 3200 cc 140 Kw / 190 cv 4M41	9/08>5/15
MITSUBISHI	PAJERO 3.2TD DID DPF 3200 cc 147 Kw / 200 cv 4M41	1/09>5/15
MITSUBISHI	**SHOGUN 3.2TD DID DPF 3200 cc 118 Kw / 160 cv 4M41**	9/08>5/11
MITSUBISHI	SHOGUN 3.2TD DID DPF 3200 cc 125 Kw / 170 cv 4M41	9/08>5/15
MITSUBISHI	SHOGUN 3.2TD DID DPF 3200 cc 140 Kw / 190 cv 4M41	9/08>5/15
MITSUBISHI	SHOGUN 3.2TD DID DPF 3200 cc 147 Kw / 200 cv 4M41	1/09>5/15