MITSUBISHI

# FD1102

PK1410 | OBD | mm. 830 | Kg. 7.20 | Euro 5

Originele ref.:

1583A056, 1583A080
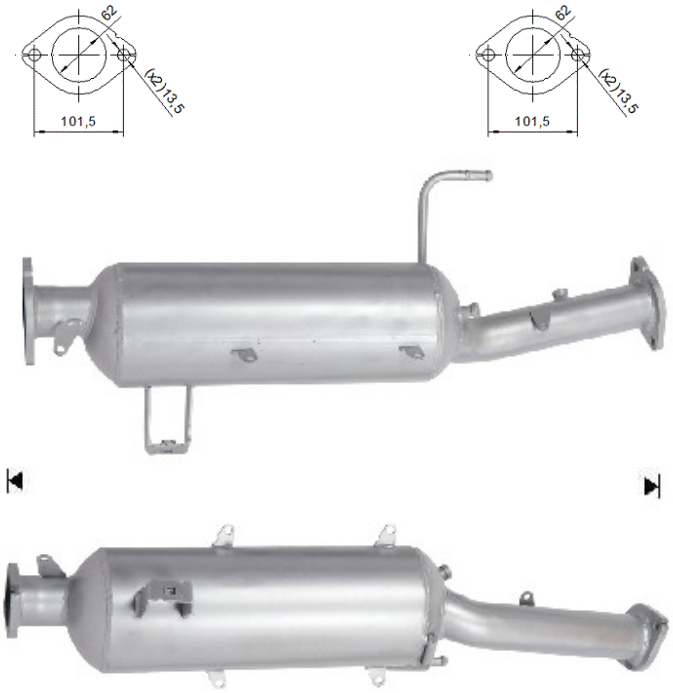
| MERK | MODEL | DATUM |
|---|---|---|
| **MITSUBISHI** | MONTERO 3.2TD DID DPF 3200 cc 118 Kw / 160 cv 4M41 | 9/08>5/11 |
| **MITSUBISHI** | **MONTERO 3.2TD DID DPF 3200 cc 125 Kw / 170 cv 4M41** | 9/08>5/15 |
| **MITSUBISHI** | MONTERO 3.2TD DID DPF 3200 cc 140 Kw / 190 cv 4M41 | 9/08>5/15 |
| **MITSUBISHI** | MONTERO 3.2TD DID DPF 3200 cc 147 Kw / 200 cv 4M41 | 1/09>5/15 |
| **MITSUBISHI** | PAJERO 3.2TD DID DPF 3200 cc 118 Kw / 160 cv 4M41 | 9/08>5/11 |
| **MITSUBISHI** | PAJERO 3.2TD DID DPF 3200 cc 125 Kw / 170 cv 4M41 | 9/08>5/15 |
| **MITSUBISHI** | PAJERO 3.2TD DID DPF 3200 cc 140 Kw / 190 cv 4M41 | 9/08>5/15 |
| **MITSUBISHI** | PAJERO 3.2TD DID DPF 3200 cc 147 Kw / 200 cv 4M41 | 1/09>5/15 |
| **MITSUBISHI** | SHOGUN 3.2TD DID DPF 3200 cc 118 Kw / 160 cv 4M41 | 9/08>5/11 |
| **MITSUBISHI** | SHOGUN 3.2TD DID DPF 3200 cc 125 Kw / 170 cv 4M41 | 9/08>5/15 |
| **MITSUBISHI** | SHOGUN 3.2TD DID DPF 3200 cc 140 Kw / 190 cv 4M41 | 9/08>5/15 |
| **MITSUBISHI** | SHOGUN 3.2TD DID DPF 3200 cc 147 Kw / 200 cv 4M41 | 1/09>5/15 |