MERCEDES

FD1078Q

PK964 | OBD | 1060 | 6.85

Originele ref.:
6394900892
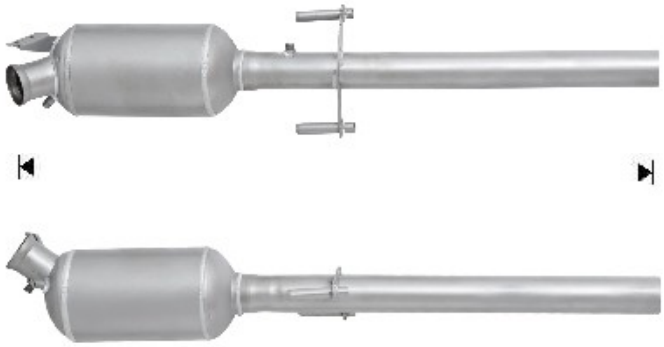
MERK	MODEL	DATUM
MERCEDES	VIANO 2.0TD CDI DPF 2148 cc 85 Kw / 116 cv 646982 (639)	8/05>4/11
MERCEDES	VIANO 2.2TD CDI DPF 2148 cc 110 Kw / 150 cv 646980, 646982 (639)	3/06>4/11
MERCEDES	**VITO 109TD CDI 2.2TD DPF 2148 cc 70 Kw / 95 cv 646980, 646981 (639)**	9/06>12/11
MERCEDES	VITO 111TD CDI 2.2TD DPF 2148 cc 85 Kw / 116 cv 646980, 646982 (639)	9/07>12/11
MERCEDES	VITO 115TD CDI 2.2TD DPF 2148 cc 110 Kw / 150 cv 646980, 646982 (639)	9/07>12/11