HYUNDAI, KIA

FD5139Q

PK892 | OBD | 600 | 7.60

Originele ref.:

289902A800, 289902A810
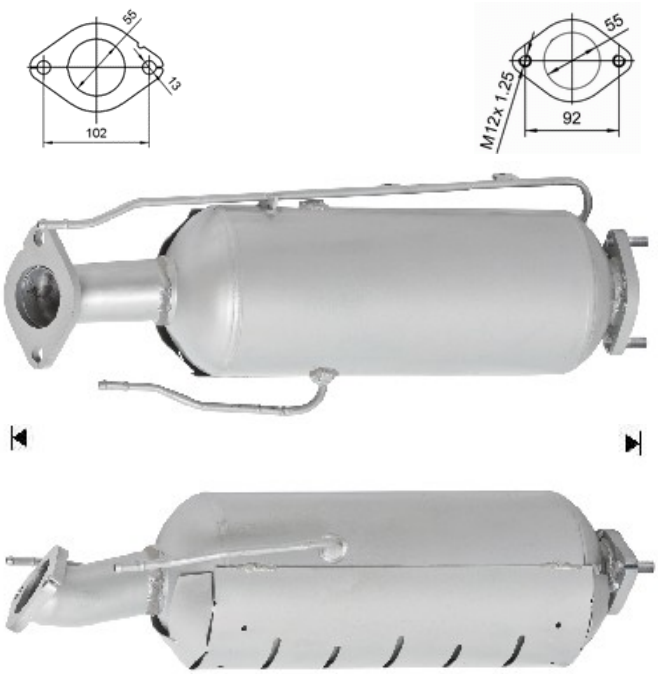
MERK	MODEL	DATUM
HYUNDAI	i30 1.6TD CRDI DPF 1582 cc 66 Kw / 90 cv D4FB	5/07>11/10
HYUNDAI	i30 1.6TD CRDI DPF 1582 cc 81 Kw / 110 cv D4FB	5/07>11/10
HYUNDAI	i30 1.6TD CRDI DPF 1582 cc 85 Kw / 116 cv D4FB	5/07>11/10
KIA	**CEED 1.6TD CRDI DPF 1582 cc 66 Kw / 90 cv D4FB**	10/06>7/09
KIA	CEED 1.6TD CRDI DPF 1582 cc 85 Kw / 116 cv D4FB	10/06>7/09