FORD

FD1061

PK1141 | OBD | mm. 690 | Kg. 5.20

Originele ref.:

1516909, 1520908, 1526541
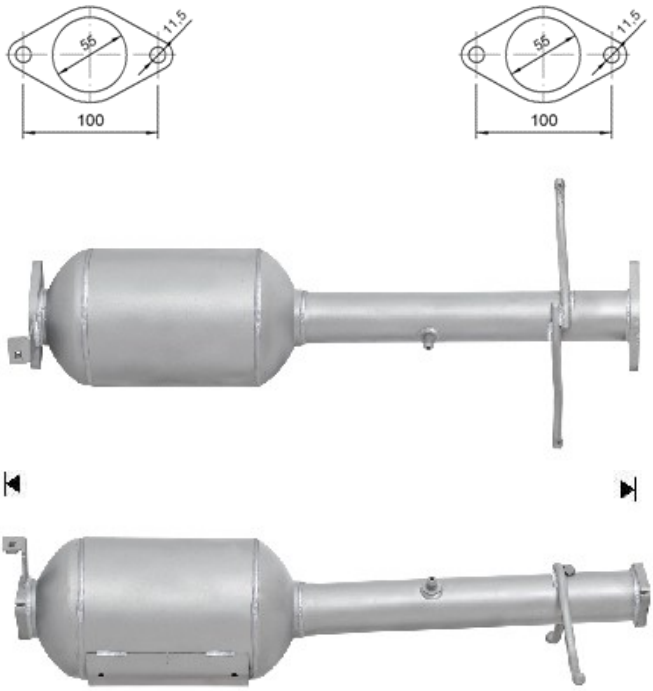
MERK	MODEL	DATUM
FORD	TOURNEO CONNECT 1.8TD TDCI DPF 1753 cc 55 Kw / 75 cv BHPA, BHPB, BHPC	3/08>12/10
FORD	TOURNEO CONNECT 1.8TD TDCI DPF 1753 cc 55 Kw / 75 cv P7PA, P7PB, R2PA	3/08>12/10
FORD	TOURNEO CONNECT 1.8TD TDCI DPF 1753 cc 66 Kw / 90 cv P9PA, P9PB, P9PC,	3/08>12/10
FORD	TOURNEO CONNECT 1.8TD TDCI DPF 1753 cc 66 Kw / 90 cv HCPA, HCPB, HCPC,	3/08>12/10
FORD	TOURNEO CONNECT 1.8TD TDCI DPF 1753 cc 81 Kw / 110 cv RWPA, RWPB,	3/08>12/10
FORD	TRANSIT CONNECT 1.8TD TDCI DPF 1753 cc 55 Kw / 75 cv BHPA, BHPB, BHPC	3/08>4/11
FORD	**TRANSIT CONNECT 1.8TD TDCI DPF 1753 cc 55 Kw / 75 cv P7PA, P7PB, R2PA**	3/08>4/11
FORD	TRANSIT CONNECT 1.8TD TDCI DPF 1753 cc 66 Kw / 90 cv P9PA, P9PB, P9PC,	3/08>4/11
FORD	TRANSIT CONNECT 1.8TD TDCI DPF 1753 cc 66 Kw / 90 cv HCPA, HCPB, HCPC,	3/08>4/11
FORD	TRANSIT CONNECT 1.8TD TDCI DPF 1753 cc 81 Kw / 110 cv RWPA, RWPB,	3/08>4/11