FORD

# FD5147Q

PK1270 | OBD | mm. 1310 | Kg. 9.60 | Euro 5

Originele ref.:

1737417, 1821988, 2224689, 2353181, 5227375
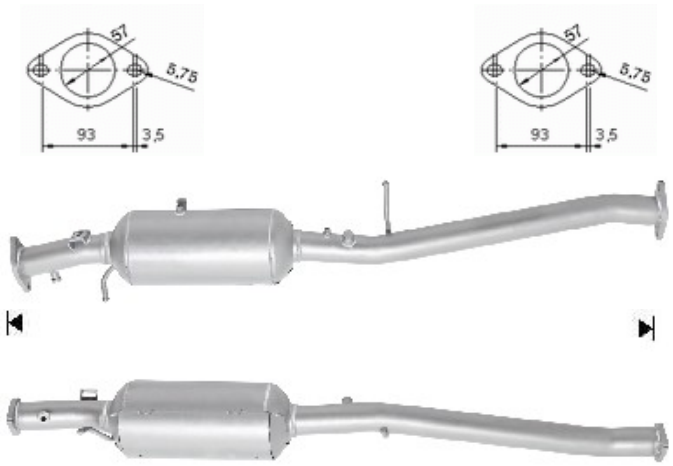
| MERK | MODEL | DATUM |
|---|---|---|
| **FORD** | RANGER 2.2TD TDCI DPF 2198 cc 92 Kw / 125 cv QW2R | 9/11>9/15 |
| **FORD** | **RANGER 2.2TD TDCI DPF 2198 cc 110 Kw / 150 cv QJ2R** | 9/11>9/15 |
| **FORD** | RANGER 3.2TD TDCI DPF 3198 cc 147 Kw / 200 cv SAFA, SA2R | 9/11>9/15 |