ALFA ROMEO, CHRYSLER JEEP, FIAT

FM5345Q

KIT PK1474 | OBD | mm. 700 | Kg. 8.70 | Euro 6

Originele ref.:

52166324, 52193976
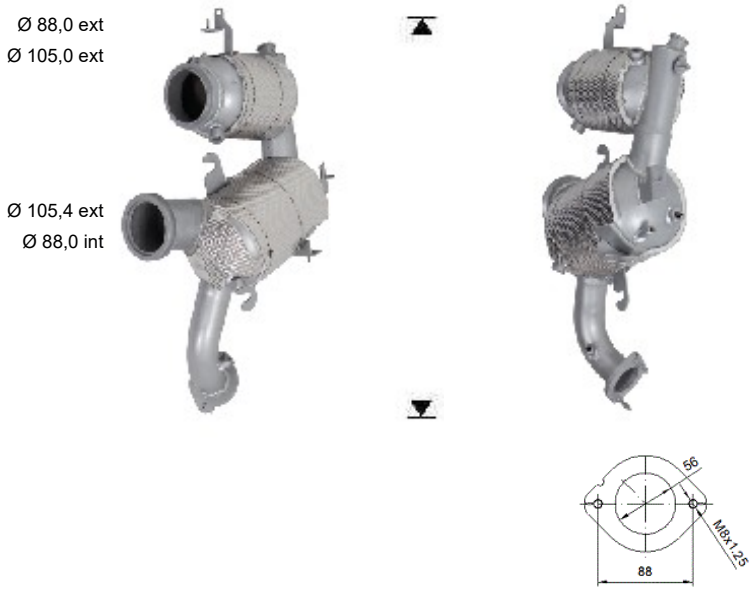
MERK	MODEL	DATUM
ALFA ROMEO	TONALE 1.6TD VGTD DPF 1598 cc 96 Kw / 131 cv 46346020	9/22>
CHRYSLER JEEP	COMPASS 1.6TD MJTD DPF 1598 cc 96 Kw / 131 cv 46346020	4/21>
CHRYSLER JEEP	RENEGADE 1.6TD MJTD DPF 1598 cc 96 Kw / 131 cv 46346020	2/20>
FIAT	**500X 1.6TD MJTD DPF 1598 cc 84 Kw / 114 cv 55260384, 55280444**	10/19>
FIAT	500X 1.6TD MJTD DPF 1598 cc 88 Kw / 120 cv 55260384, 55280444	10/19>
FIAT	500X 1.6TD MJTD DPF 1598 cc 96 Kw / 131 cv 46346020	1/21>
FIAT	DOBLÓ 1.6TD MJTD DPF 1598 cc 74 Kw / 101 cv 263A3000, 263A9000, 55280444	1/19>
FIAT	DOBLÓ 1.6TD MJTD DPF 1598 cc 88 Kw / 120 cv 46346020, 55280444	1/19>
FIAT	TIPO 1.6TD MJTD DPF 1598 cc 96 Kw / 131 cv 46346020	11/20>