BMW

FL5302Q

PK1445 | OBD | mm. 610 | Kg. 8.80 | Euro 6

Originele ref.:
18308573150
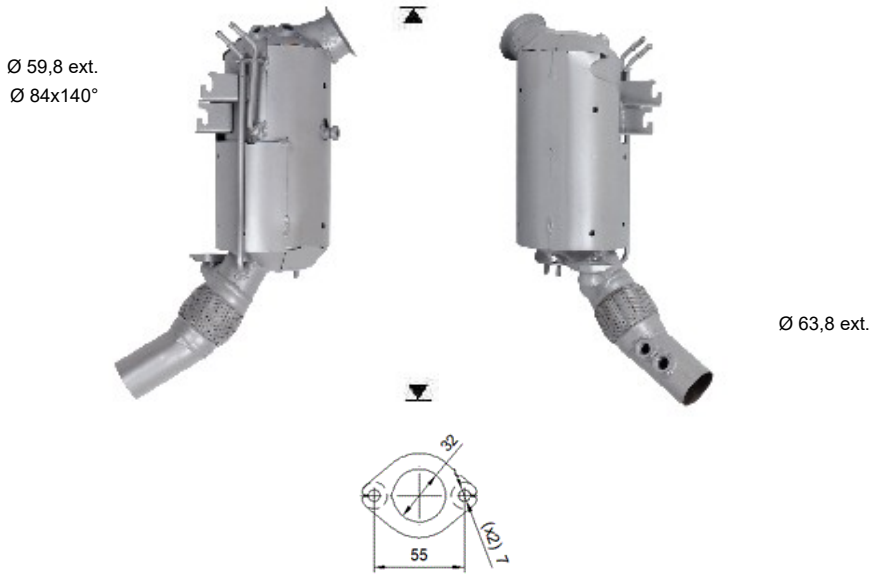
MERK	MODEL	DATUM
BMW	**520D 2.0TD DPF 1995 cc 120 Kw / 163 cv B47D20A (B47) G30, G31**	6/16>3/19
BMW	520D 2.0TD DPF 1995 cc 140 Kw / 190 cv B47D20A (B47) G30, G31	6/16>3/19
BMW	520XD 2.0TD DPF 1995 cc 120 Kw / 163 cv B47D20A (B47) G30, G31	6/16>3/19
BMW	520XD 2.0TD DPF 1995 cc 140 Kw / 190 cv B47D20A (B47) G30, G31	6/16>3/19
BMW	525D 2.0TD DPF 1995 cc 155 Kw / 211 cv B47D20B (B47) G30, G31	7/17>
BMW	525D 2.0TD DPF 1995 cc 170 Kw / 231 cv B47D20B (B47) G30, G31	7/17>
BMW	725D 2.0TD DPF 1995 cc 155 Kw / 211 cv B47D20B (B47) G11, G12	7/15>3/19
BMW	725D 2.0TD DPF 1995 cc 170 Kw / 231 cv B47D20B (B47) G11, G12	7/15>3/19
BMW	X3 25Xd 2.0TD DPF 1995 cc 155 Kw / 211 cv B47D20B (B47) G01	4/18>
BMW	X3 25Xd 2.0TD DPF 1995 cc 170 Kw / 231 cv B47D20B (B47) G01	4/18>
BMW	X4 25Xd 2.0TD DPF 1995 cc 155 Kw / 211 cv B47D20B (B47) G02	4/18>
BMW	X4 25Xd 2.0TD DPF 1995 cc 170 Kw / 231 cv B47D20B (B47) G02	4/18>