SUBARU, TOYOTA

FD1050Q

PK1215 300 5.50

Réf. Original.:

2505233020, 2505233040
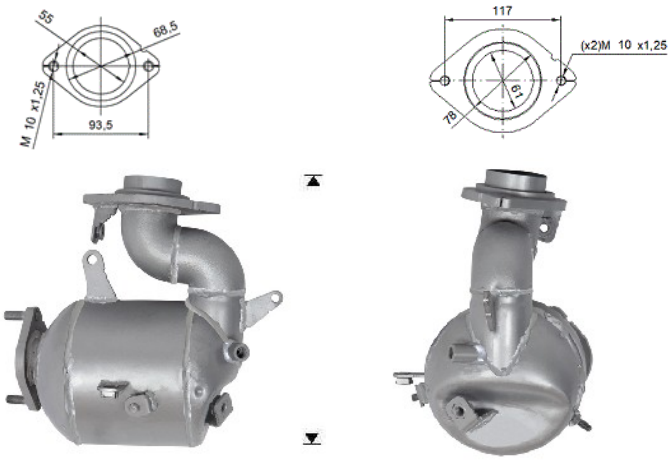
MARQUE	MODÈLE	DATE
SUBARU	TREZIA 1.4TD DPF 1364 cc 66 Kw / 90 cv 1NDTV	11/10>4/15
TOYOTA	AURIS 1.4TD D4D DPF 1364 cc 66 Kw / 90 cv 1NDTV	12/08>9/12
TOYOTA	COROLLA 1.4TD D4D DPF 1364 cc 66 Kw / 90 cv 1NDTV	12/08>5/13
TOYOTA	URBAN CRUISER 1.4TD D4D DPF 1364 cc 66 Kw / 90 cv 1NDTV	1/09>4/14
TOYOTA	VERSO 1.4TD D4D DPF 1364 cc 66 Kw / 90 cv 1NDTV	11/10>3/15
TOYOTA	**YARIS 1.4TD D4D DPF 1364 cc 66 Kw / 90 cv 1NDTV**	11/08>5/15