SUBARU, TOYOTA

# FD1050Q

PK1215 300 5.50

Réf. Original.:

2505233020, 2505233040
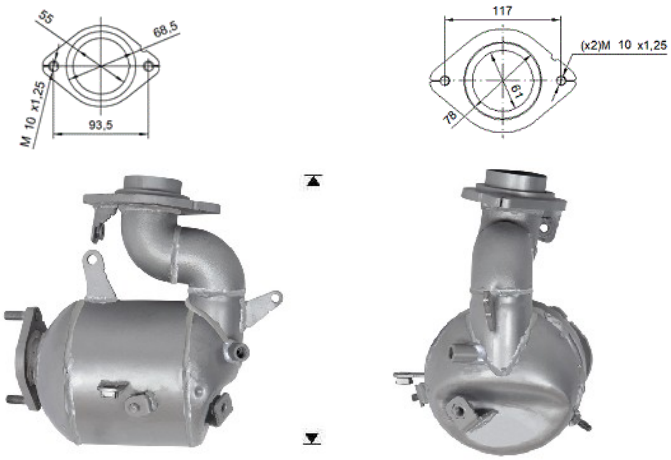
| MARQUE | MODÈLE | DATE |
|---|---|---|
| SUBARU | TREZIA 1.4TD DPF 1364 cc 66 Kw / 90 cv 1NDTV | 11/10>4/15 |
| **TOYOTA** | AURIS 1.4TD D4D DPF 1364 cc 66 Kw / 90 cv 1NDTV | 12/08>9/12 |
| **TOYOTA** | COROLLA 1.4TD D4D DPF 1364 cc 66 Kw / 90 cv 1NDTV | 12/08>5/13 |
| **TOYOTA** | URBAN CRUISER 1.4TD D4D DPF 1364 cc 66 Kw / 90 cv 1NDTV | 1/09>4/14 |
| **TOYOTA** | VERSO 1.4TD D4D DPF 1364 cc 66 Kw / 90 cv 1NDTV | 11/10>3/15 |
| **TOYOTA** | **YARIS 1.4TD D4D DPF 1364 cc 66 Kw / 90 cv 1NDTV** | 11/08>5/15 |