SEAT

FD5159Q

PK1235 | OBD | mm. 520 | Kg. 6.10 | Man | Euro 5

Réf. Original.:
3R0254750X
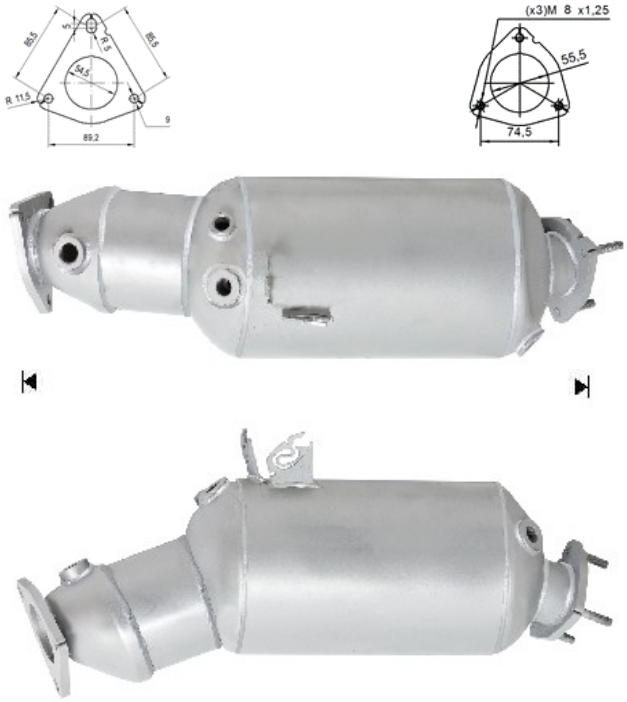
MARQUE	MODÈLE	DATE
SEAT	EXEO 2.0TDI 16V DPF 1968 cc 88 Kw / 120 cv CAGC, CJCC	12/08>11/10
SEAT	**EXEO 2.0TDI 16V DPF 1968 cc 105 Kw / 143 cv CAGA, CJCA**	12/08>11/10
SEAT	EXEO 2.0TDI 16V DPF 1968 cc 125 Kw / 170 cv CAHA, CGLB	2/09>11/10