SEAT, SKODA, VOLKSWAGEN

37943

PK573 290 3.60

Réf. Original:

036253052GX
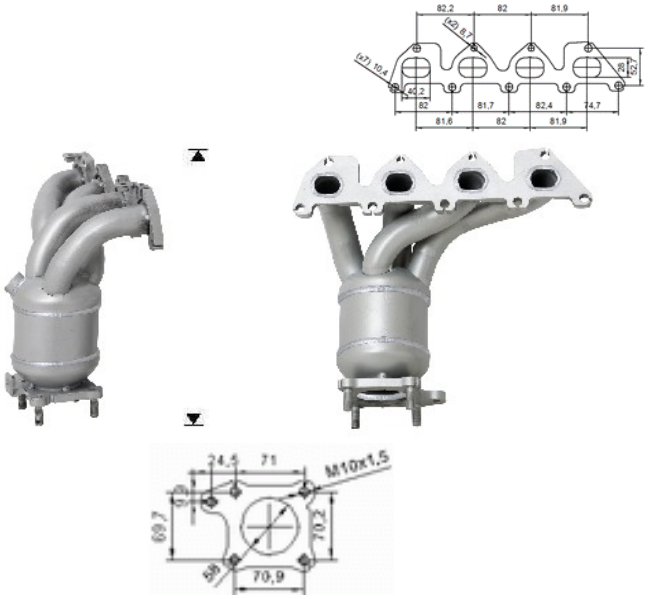
MARQUE	MODÈLE	DATE
SEAT	LEON 1.4i 16V 1390 cc 55 Kw / 75 cv AXP, BCA	7/00>10/05
SKODA	OCTAVIA 1.4i 16V 1390 cc 55 Kw / 75 cv AXP, BCA	8/00>10/05
VOLKSWAGEN	**BORA 1.4i 16V 1390 cc 55 Kw / 75 cv AXP, BCA**	10/00>5/05
VOLKSWAGEN	GOLF IV 1.4i 16V 1390 cc 55 Kw / 75 cv AXP, BCA	9/00>6/06