CITROËN, PEUGEOT

FD5106

PK1173 910 6.70

Orig.:

1606604680

MARCA	MODELO	FECHA
CITROËN	JUMPER 2.2TD HDI DPF 2198 cc 81 Kw / 110 cv P22DTE (4HG)	10/11>
CITROËN	JUMPER 2.2TD HDI DPF 2198 cc 96 Kw / 130 cv P22DTE (4HH)	10/11>
CITROËN	JUMPER 2.2TD HDI DPF 2198 cc 110 Kw / 150 cv P22DTE (4HJ)	10/11>
PEUGEOT	BOXER 2.2TD HDI DPF 2198 cc 81 Kw / 110 cv P22DTE (4HG)	10/11>
PEUGEOT	**BOXER 2.2TD HDI DPF 2198 cc 96 Kw / 130 cv P22DTE (4HH)**	10/11>
PEUGEOT	BOXER 2.2TD HDI DPF 2198 cc 110 Kw / 150 cv P22DTE (4HJ)	10/11>

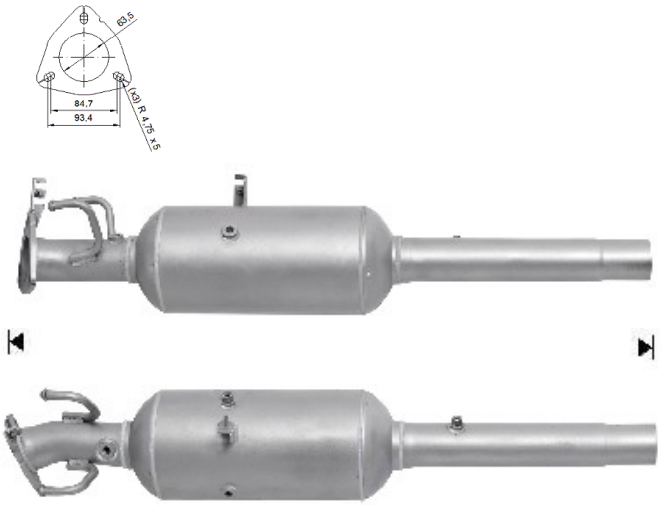

Ø 56,5 ext.