CITROËN, FIAT, OPEL, PEUGEOT

FR5310Q

KIT PK1457 | OBD | mm. 1380 | Kg. 13.50 | Euro 6

Orig.:

1393927080, 1640323780, 1642547880

MARCA	MODELO	FECHA
CITROËN	JUMPER 2.2TD HDI DPF 2179 cc 88 Kw / 120 cv DW12RUE (4HA)	8/19>9/21
CITROËN	JUMPER 2.2TD HDI DPF 2179 cc 103 Kw / 140 cv DW12RUD (4HB)	8/19>9/21
CITROËN	JUMPER 2.2TD HDI DPF 2179 cc 121 Kw / 165 cv DW12RUC (4HH)	8/19>9/21
FIAT	DUCATO 2.2TD MJTD DPF 2184 cc 88 Kw / 120 cv 46348913, 46349131	7/21>5/22
FIAT	DUCATO 2.2TD MJTD DPF 2184 cc 103 Kw / 140 cv 46348913, 46349131	7/21>5/22
FIAT	DUCATO 2.2TD MJTD DPF 2184 cc 118 Kw / 160 cv 46348913, 46349131	7/21>5/22
FIAT	DUCATO 2.2TD MJTD DPF 2184 cc 132 Kw / 180 cv 46348913, 46349131	7/21>5/22
OPEL	MOVANO 2.2TD CDTI DPF 2179 cc 88 Kw / 120 cv DW12RUE	9/20>9/21
OPEL	MOVANO 2.2TD CDTI DPF 2179 cc 103 Kw / 140 cv DW12RUD	9/20>9/21
OPEL	**MOVANO 2.2TD CDTI DPF 2179 cc 121 Kw / 165 cv DW12RUC**	9/20>9/21
PEUGEOT	BOXER 2.2TD HDI DPF 2179 cc 88 Kw / 120 cv DW12RUE (4HA)	7/19>9/21
PEUGEOT	BOXER 2.2TD HDI DPF 2179 cc 103 Kw / 140 cv DW12RUD (4HB)	7/19>9/21
PEUGEOT	BOXER 2.2TD HDI DPF 2179 cc 121 Kw / 165 cv DW12RUC (4HH)	7/19>9/21

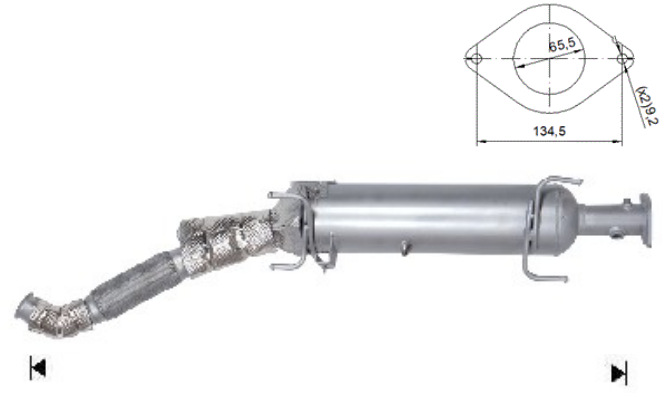

Ø 70x90°