AUDI, SEAT, SKODA, VOLKSWAGEN

FM5336Q

PK1466 | 360 | 8.70

Orig.:

04L131602NX, 04L131670LX, 04L131671KX, 04L131671NX, 04L131678F, 04L131678FX, 04L131678S
04L131678SX

MARCA	MODELO	FECHA
AUDI	Q3 Quattro 40 2.0TDI DPF 1968 cc 140 Kw / 190 cv DFHA	10/18>
SEAT	TARRACO 2.0TDI DPF 1968 cc 140 Kw / 190 cv DFHA	9/18>
SKODA	KODIAQ 2.0TDI 4x4 DPF 1968 cc 140 Kw / 190 cv DFHA	10/16>
SKODA	SUPERB 2.0TDI DPF 1968 cc 140 Kw / 190 cv DDAA, DFCA, DFHA	3/15>
VOLKSWAGEN	ARTEÓN 2.0TDI DPF 1968 cc 110 Kw / 150 cv DSRA, DSRB	3/17>
VOLKSWAGEN	ARTEÓN 2.0TDI DPF 1968 cc 140 Kw / 190 cv DFHA	5/17>
VOLKSWAGEN	PASSAT VIII 2.0TDI DPF 1968 cc 140 Kw / 190 cv DDAA, DFCA, DFHA	11/14>
VOLKSWAGEN	**TIGUAN 2.0TDI 4Motion DPF 1968 cc 140 Kw / 190 cv DFHA**	1/16>7/21
VOLKSWAGEN	TOURAN 2.0TDI DPF 1968 cc 140 Kw / 190 cv DFHA	11/15>7/19

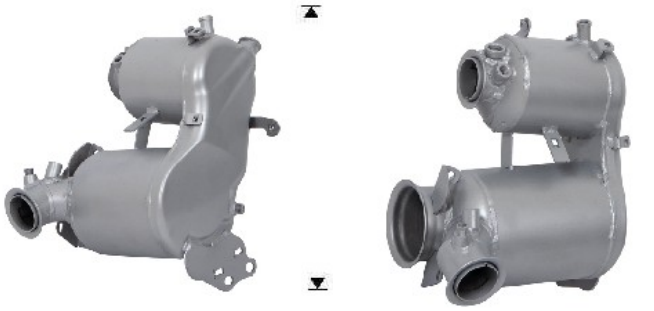

Ø 77x140°
Ø 54,8 ext.

Ø 111x140°

Ø 82,5x140°
Ø 65,0 ext.