CHRYSLER JEEP, FIAT

FL5235

PK1361 | 650 | 7.60

Orig.:

51980584, 52049399, 52098674, K68224292AB, K68224292AC, K68224292AD

MARCA	MODELO	FECHA
CHRYSLER JEEP	COMPASS 1.6TD MJTD DPF 1598 cc 88 Kw / 120 cv 55260384 (EJJ)	3/17>8/18
CHRYSLER JEEP	COMPASS 2.0TD MJTD DPF 1956 cc 103 Kw / 140 cv 55263087 (EBS)	3/17>
CHRYSLER JEEP	**COMPASS 2.0TD MJTD DPF 1956 cc 125 Kw / 170 cv 55263087 (EBS)**	1/16>
CHRYSLER JEEP	COMPASS 2.0TD MJTD DPF 1956 cc 127 Kw / 173 cv 55263088 (EBS)	3/17>
CHRYSLER JEEP	RENEGADE 1.6TD MJTD DPF 1598 cc 88 Kw / 120 cv 55280444, 55263113 (EJK)	7/14>
CHRYSLER JEEP	RENEGADE 2.0TD MJTD DPF 1956 cc 103 Kw / 140 cv 55263087, 55283099,	7/14>
CHRYSLER JEEP	RENEGADE 2.0TD MJTD DPF 1956 cc 125 Kw / 170 cv 55260388, 55283099 (EBT)	7/14>
FIAT	500X 1.6TD MJTD DPF 1598 cc 88 Kw / 120 cv 55260384, 55280444	9/14>5/18
FIAT	500X 2.0TD MJTD DPF 1956 cc 100 Kw / 136 cv 55263087, 55263088	9/14>
FIAT	500X 2.0TD MJTD DPF 1956 cc 103 Kw / 140 cv 55263087, 55263088	9/14>

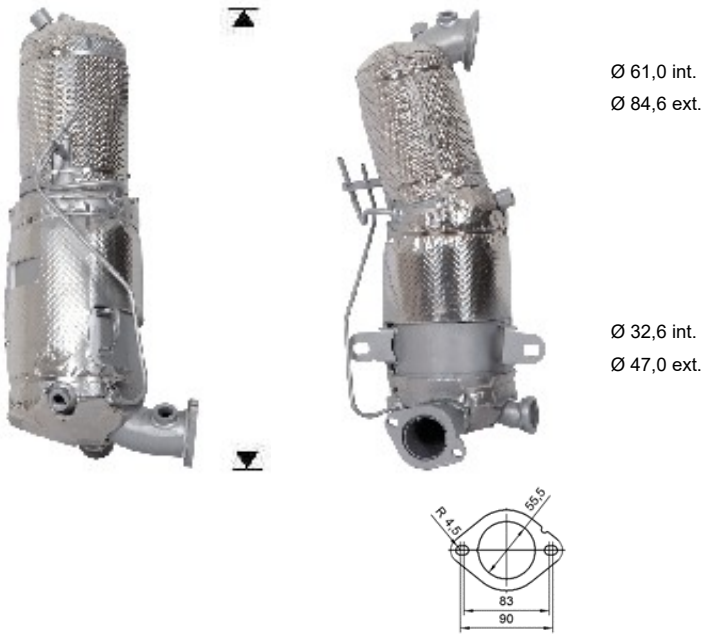

Ø 61,0 int.
Ø 84,6 ext.

Ø 32,6 int.
Ø 47,0 ext.