MERCEDES

FD1002

PK964 | 660 | 5.90

Orig.:

9064900592, 9064900992

MARCA	MODELO	FECHA
MERCEDES	**SPRINTER 209 2.1TD CDI DPF 2148 cc 65 Kw / 88 cv 646984 (906)**	2/06>12/09
MERCEDES	SPRINTER 309 2.1TD CDI DPF 2148 cc 65 Kw / 88 cv 696984 (906)	2/06>12/09
MERCEDES	SPRINTER 509 2.1TD CDI DPF 2148 cc 65 Kw / 88 cv 696984 (906)	2/06>12/09
MERCEDES	SPRINTER 211 2.1TD CDI DPF 2148 cc 80 Kw / 109cv 646985 (906)	2/06>12/09
MERCEDES	SPRINTER 311 2.1TD CDI DPF 2148 cc 80 Kw / 109cv 646985 (906)	2/06>12/09
MERCEDES	SPRINTER 411 2.1TD CDI DPF 2148 cc 80 Kw / 109cv 646985 (906)	2/06>12/09
MERCEDES	SPRINTER 511 2.1TD CDI DPF 2148 cc 80 Kw / 109cv 646985 (906)	2/06>12/09
MERCEDES	SPRINTER 213 2.1TD CDI DPF 2148 cc 95 Kw / 129 cv 646986 (906)	2/06>12/09
MERCEDES	SPRINTER 313 2.1TD CDI DPF 2148 cc 95 Kw / 129 cv 646986 (906)	2/06>12/09
MERCEDES	SPRINTER 513 2.1TD CDI DPF 2148 cc 95 Kw / 129 cv 646986 (906)	2/06>12/09
MERCEDES	SPRINTER 215 2.1TD CDI DPF 2148 cc 110 Kw / 150 cv 646986, 646989, 646990	2/06>12/09
MERCEDES	SPRINTER 315 2.1TD CDI DPF 2148 cc 110 Kw / 150 cv 646986, 646989, 646990	2/06>12/09
MERCEDES	SPRINTER 415 2.1TD CDI DPF 2148 cc 110 Kw / 150 cv 646986, 646989, 646990	2/06>12/09
MERCEDES	SPRINTER 515 2.1TD CDI DPF 2148 cc 110 Kw / 150 cv 646986, 646989, 646990	2/06>12/09

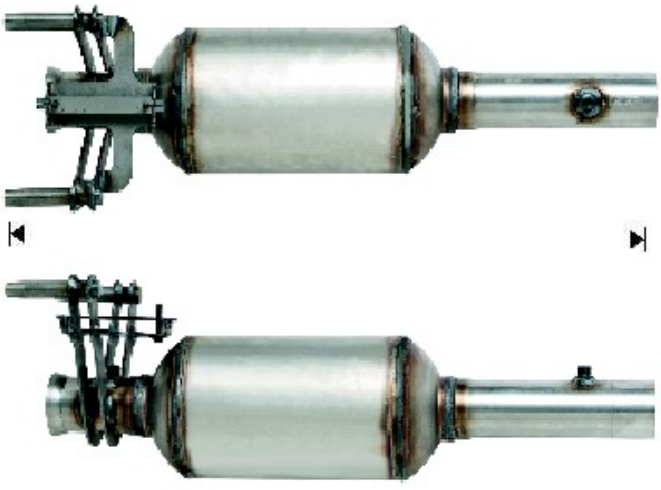

Ø 59,8 ext