


MERCEDES, NISSAN, RENAULT

# FD5081

PK1195 | OBD | 440 | 6.80 | Euro 5

Orig.:

1764900514, 2080000Q0J, 2080000Q0P, 208A00141R, 208A00184R, 208A00506R, 208A00728R, 208A05771R
8660006179

| MARCA | MODELO | FECHA |
|---|---|---|
| **MERCEDES** | A160 1.5TD CDI DPF 1461 cc 66 Kw / 90 cv 607951 (K9K) (176) | 9/12>7/15 |
| **MERCEDES** | A180 1.5TD CDI DPF 1461 cc 80 Kw / 109 cv 607951 (K9K) (176) | 9/12>7/15 |
| **MERCEDES** | B160 1.5TD CDI DPF 1461 cc 66 Kw / 90 cv 607951 (K9K) (246) | 9/12>7/15 |
| **MERCEDES** | B180 1.5TD CDI DPF 1461 cc 80 Kw / 109 cv 607951 (K9K) (246) | 9/11>7/15 |
| **MERCEDES** | **CITAN 108 1.5TD CDI DPF 1461 cc 55 Kw / 75 cv 607951 (K9K) (415)** | 10/12>7/15 |
| **MERCEDES** | CITAN 109 1.5TD CDI DPF 1461 cc 66 Kw / 90 cv 607951 (K9K) (415) | 10/12>7/15 |
| **MERCEDES** | CITAN 111 1.5TD CDI DPF 1461 cc 81 Kw / 110 cv 607951 (K9K) (415) | 3/13>7/15 |
| **MERCEDES** | CLA180 1.5TD CDI DPF 1461 cc 80 Kw / 109 cv 607951 (K9K) (117) | 9/13>7/15 |
| **MERCEDES** | GLA180 1.5TD CDI DPF 1461 cc 80 Kw / 109 cv 607951 (K9K) (156) | 7/14>7/15 |
| NISSAN | JUKE 1.5TD DCI DPF 1461 cc 81 Kw / 110 cv K9K | 5/13> |
| NISSAN | NOTE 1.5TD DCI DPF 1461 cc 66 Kw / 90 cv K9K | 6/13>7/15 |
| NISSAN | NV 200 1.5TD DCI DPF 1461 cc 63 Kw / 86 cv K9K | 10/13> |
| NISSAN | NV 200 1.5TD DCI DPF 1461 cc 81 Kw / 110 cv K9K | 10/13>7/15 |
| NISSAN | PULSAR 1.5TD DCI DPF 1461 cc 81 Kw / 110 cv K9K | 7/14>7/15 |
| NISSAN | QASHQAI 1.5TD DCI DPF 1461 cc 81 Kw / 110 cv K9K | 12/13>7/15 |
| RENAULT | CAPTUR 1.5TD DCI DPF 1461 cc 66 Kw / 90 cv K9K 608, 609 | 4/13>6/17 |
| RENAULT | CLIO 1.5TD DCI DPF 1461 cc 66 Kw / 90 cv K9K 609 | 11/12>6/17 |
| RENAULT | KADJAR 1.5TD DCI DPF 1461 cc 81 Kw / 110 cv K9K608, K9K636 | 6/15> |
| RENAULT | KANGOO 1.5TD DCI DPF 1461 cc 55 Kw / 75 cv K9K 608 | 4/13> |
| RENAULT | KANGOO 1.5TD DCI DPF 1461 cc 66 Kw / 90 cv K9K 608 | 2/12> |
| RENAULT | KANGOO 1.5TD DCI DPF 1461 cc 81 Kw / 110 cv K9K 636 | 4/13> |
| RENAULT | MEGANE 1.5TD DCI DPF 1461 cc 81 Kw / 110 cv K9K 636 | 4/12> |
| RENAULT | SCENIC 1.5TD DCI DPF 1461 cc 81 Kw / 110 cv K9K 636 | 4/12> |

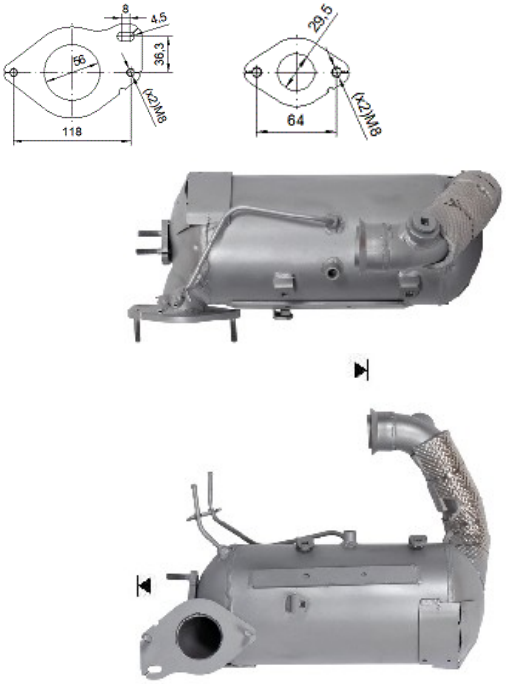


Ø 60x90º