

MERCEDES, NISSAN, RENAULT

FD5081



PK1195 | 440 | 6.80

Orig.:

1764900514, 2080000Q0J, 2080000Q0P, 208A00141R, 208A00184R, 208A00506R, 208A00728R, 208A05771R
8660006179

MARCA	MODELO	FECHA
MERCEDES	**A160 1.5TD CDI DPF 1461 cc 66 Kw / 90 cv 607951 (K9K) (176)**	9/12>7/15
MERCEDES	A180 1.5TD CDI DPF 1461 cc 80 Kw / 109 cv 607951 (K9K) (176)	9/12>7/15
MERCEDES	B160 1.5TD CDI DPF 1461 cc 66 Kw / 90 cv 607951 (K9K) (246)	9/12>7/15
MERCEDES	B180 1.5TD CDI DPF 1461 cc 80 Kw / 109 cv 607951 (K9K) (246)	9/11>7/15
MERCEDES	CITAN 108 1.5TD CDI DPF 1461 cc 55 Kw / 75 cv 607951 (K9K) (415)	10/12>7/15
MERCEDES	CITAN 109 1.5TD CDI DPF 1461 cc 66 Kw / 90 cv 607951 (K9K) (415)	10/12>7/15
MERCEDES	CITAN 111 1.5TD CDI DPF 1461 cc 81 Kw / 110 cv 607951 (K9K) (415)	3/13>7/15
MERCEDES	CLA180 1.5TD CDI DPF 1461 cc 80 Kw / 109 cv 607951 (K9K) (117)	9/13>7/15
MERCEDES	GLA180 1.5TD CDI DPF 1461 cc 80 Kw / 109 cv 607951 (K9K) (156)	7/14>7/15
NISSAN	JUKE 1.5TD DCI DPF 1461 cc 81 Kw / 110 cv K9K	5/13>
NISSAN	NOTE 1.5TD DCI DPF 1461 cc 66 Kw / 90 cv K9K	6/13>7/15
NISSAN	NV 200 1.5TD DCI DPF 1461 cc 63 Kw / 86 cv K9K	10/13>
NISSAN	NV 200 1.5TD DCI DPF 1461 cc 81 Kw / 110 cv K9K	10/13>7/15
NISSAN	PULSAR 1.5TD DCI DPF 1461 cc 81 Kw / 110 cv K9K	7/14>7/15
NISSAN	QASHQAI 1.5TD DCI DPF 1461 cc 81 Kw / 110 cv K9K	12/13>7/15
RENAULT	CAPTUR 1.5TD DCI DPF 1461 cc 66 Kw / 90 cv K9K 608, 609	4/13>6/17
RENAULT	CLIO 1.5TD DCI DPF 1461 cc 66 Kw / 90 cv K9K 609	11/12>6/17
RENAULT	KADJAR 1.5TD DCI DPF 1461 cc 81 Kw / 110 cv K9K608, K9K636	6/15>
RENAULT	KANGOO 1.5TD DCI DPF 1461 cc 55 Kw / 75 cv K9K 608	4/13>
RENAULT	KANGOO 1.5TD DCI DPF 1461 cc 66 Kw / 90 cv K9K 608	2/12>
RENAULT	KANGOO 1.5TD DCI DPF 1461 cc 81 Kw / 110 cv K9K 636	4/13>
RENAULT	MEGANE 1.5TD DCI DPF 1461 cc 81 Kw / 110 cv K9K 636	4/12>
RENAULT	SCENIC 1.5TD DCI DPF 1461 cc 81 Kw / 110 cv K9K 636	4/12>

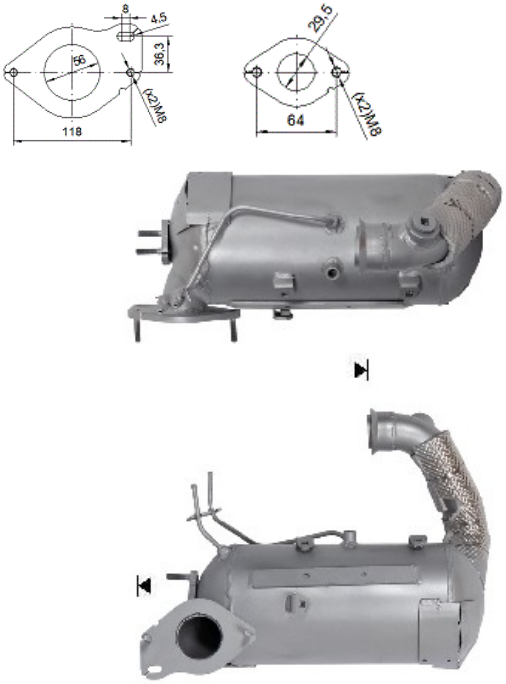

Ø 60x90º