LAND ROVER

FD1086Q

KIT

OBD

PK1258

mm. 530

Kg. 7.20

Euro 5

Orig.:

LR013742, LR056206

MARCA	MODELO	FECHA
LAND ROVER	DISCOVERY 3.0TD DPF 2993 cc 155 Kw / 211 cv 306DT	6/10>
LAND ROVER	DISCOVERY 3.0TD DPF 2993 cc 183 Kw / 249 cv 306DT	6/10>
LAND ROVER	**DISCOVERY 3.0TD DPF 2993 cc 188 Kw / 256 cv 306DT**	6/10>
LAND ROVER	RANGE ROVER SPORT 3.0TD DPF 2993 cc 155 Kw / 211 cv 306DT	6/09>
LAND ROVER	RANGE ROVER SPORT 3.0TD DPF 2993 cc 180 Kw / 245 cv 306DT	6/09>
LAND ROVER	RANGE ROVER SPORT 3.0TD DPF 2993 cc 183 Kw / 249 cv 306DT	6/09>
LAND ROVER	RANGE ROVER SPORT 3.0TD DPF 2993 cc 188 Kw / 256 cv 306DT	6/09>

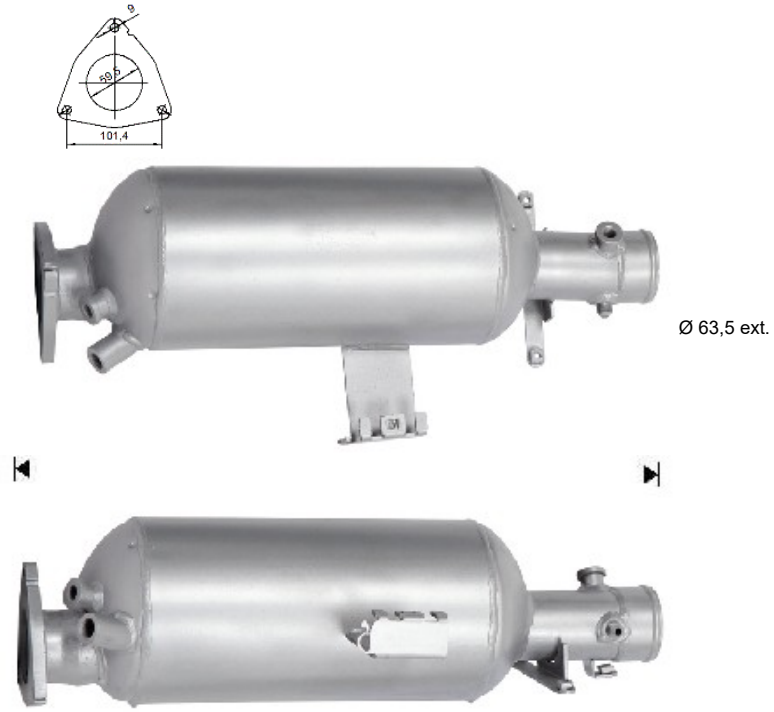

Ø 63,5 ext.