FORD

FL5194Q

PK1341 640 8.05

Orig.:

1879591, 1890168, 2005532, 2054054, 2062297, 2075907, 2078647, 2220567, 2280995

MARCA	MODELO	FECHA
FORD	C-MAX 1.5TD TDCI DPF 1499 cc 70 Kw / 95 cv XXDA, XXDC	4/15>12/19
FORD	C-MAX 1.5TD TDCI DPF 1499 cc 77 Kw / 105 cv AEDA, XXDB	4/15>12/19
FORD	C-MAX 1.5TD TDCI DPF 1499 cc 88 Kw / 120 cv XWDA, XWDB, XWDC, XWDD,	4/15>12/19
FORD	FOCUS 1.5TD TDCI DPF 1499 cc 70 Kw / 95 cv XXDA, XXDC, XXDD	10/14>9/16
FORD	FOCUS 1.5TD TDCI DPF 1499 cc 77 Kw / 105 cv AEDA, XXDB	10/14>2/20
FORD	FOCUS 1.5TD TDCI DPF 1499 cc 88 Kw / 120 cv XWDA, XWDB, XWDC, XWDD,	10/14>9/16
FORD	KUGA 1.5TD TDCI DPF 1499 cc 88 Kw / 120 cv XWMB, XWMC	9/16>6/19
FORD	MONDEO 1.5TD TDCI DPF 1499 cc 88 Kw / 120 cv UGCC, XUCA	5/15>11/22
FORD	TOURNEO CONNECT 1.5TD TDCI DPF 1499 cc 55 Kw / 75 cv XUGA	6/15>
FORD	TOURNEO CONNECT 1.5TD TDCI DPF 1499 cc 70 Kw / 95 cv XXGA	8/16>
FORD	TOURNEO CONNECT 1.5TD TDCI DPF 1499 cc 74 Kw / 101 cv XVGA, XVGB, XVGC	6/15>
FORD	TOURNEO CONNECT 1.5TD TDCI DPF 1499 cc 88 Kw / 120 cv XWGA, XWGB	6/15>
FORD	TRANSIT CONNECT 1.5TD TDCI DPF 1499 cc 55 Kw / 75 cv XUGA	6/15>
FORD	**TRANSIT CONNECT 1.5TD TDCI DPF 1499 cc 70 Kw / 95 cv XXGA**	3/16>
FORD	TRANSIT CONNECT 1.5TD TDCI DPF 1499 cc 74 Kw / 101 cv XVGA, XVGB, XVGC	6/15>
FORD	TRANSIT CONNECT 1.5TD TDCI DPF 1499 cc 88 Kw / 120 cv XWGA, XWGB	6/15>
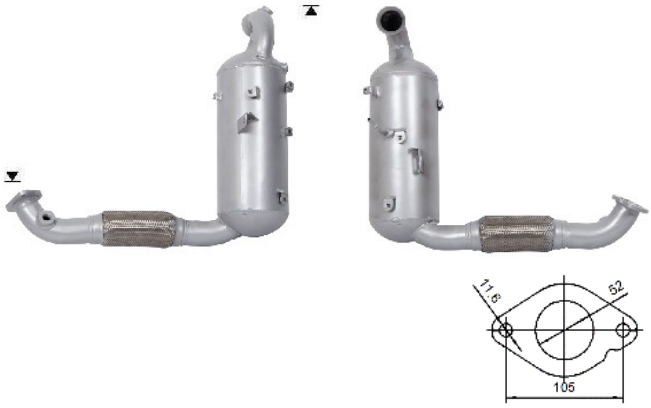
Ø 67x90°