FORD

FD5119

PK1163 | OBD | 1145 | 7.90 | Euro 5

Orig.:

1695761, 1705180, 1751870, 1779390, 1794538, 1822809, 1827171, 1846162, 1846163, 1877034, 1877035

MARCA	MODELO	FECHA
FORD	C-MAX 2.0TD TDCI DPF 1997 cc 85 Kw / 116 cv TYDA	8/10>6/15
FORD	C-MAX 2.0TD TDCI DPF 1997 cc 100 Kw / 136 cv UKDB	8/10>6/15
FORD	C-MAX 2.0TD TDCI DPF 1997 cc 103 Kw / 140 cv UFDB	8/10>6/15
FORD	C-MAX 2.0TD TDCI DPF 1997 cc 120 Kw / 163 cv TXDB	8/10>6/15
FORD	**FOCUS 2.0TD TDCI DPF 1997 cc 85 Kw / 116 cv TYDA**	1/11>7/15
FORD	FOCUS 2.0TD TDCI DPF 1997 cc 100 Kw / 136 cv UKDB	1/11>7/15
FORD	FOCUS 2.0TD TDCI DPF 1997 cc 103 Kw / 140 cv UFDB	1/11>7/15
FORD	FOCUS 2.0TD TDCI DPF 1997 cc 120 Kw / 163 cv TXDB	1/11>7/15

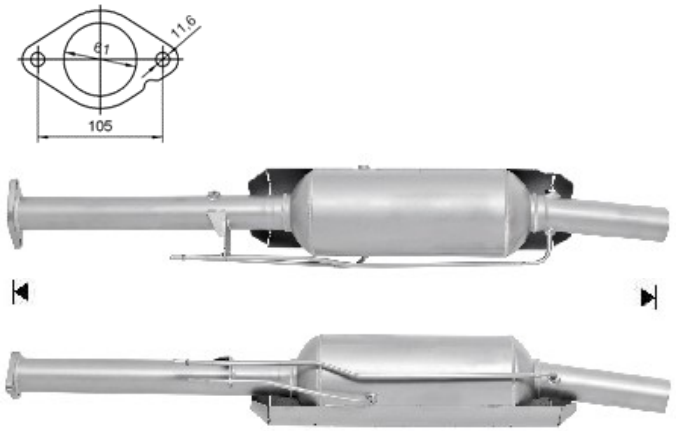

Ø 60 ext.