


FORD, VOLVO

# FD1003Q

PK965 | 635 | 8.10

Orig.:

1306079, 1310191, 1361317, 1420068, 1422975, 1436992, 1453045, 1460442, 1463993, 1513167, 1529579
1556099, 1607729, 1683846, 1689258, 1872226, 1948720, 1948721, 31293324, 36000074, 36001001, 36002223
36002473, 36002495, 36002589, 36050309, 36050342

| MARCA | MODELO | FECHA |
|---|---|---|
| **FORD** | C-MAX 2.0TD TDCI DPF 1997 cc 81 Kw / 110 cv IXDA | 2/08>9/10 |
| **FORD** | C-MAX 2.0TD TDCI DPF 1997 cc 100 Kw / 136 cv G6DA, G6DB, G6DD, G6DG | 2/07>8/10 |
| **FORD** | **FOCUS 2.0TD TDCI DPF 1997 cc 81 Kw / 110 cv IXDA** | 12/07>7/11 |
| **FORD** | FOCUS 2.0TD TDCI DPF 1997 cc 100 Kw / 136 cv G6DA, G6DB, G6DD, G6DG | 9/04>9/12 |
| **FORD** | FOCUS 2.0TD TDCI DPF Power shift 1997 cc 100 Kw / 136 cv G6DG | 12/07>8/10 |
| **FORD** | FOCUS C-MAX 2.0TDI DPF 1997 cc 98 Kw / 133 cv G6DC/E | 10/03>2/07 |
| **FORD** | FOCUS C-MAX 2.0TD TDCI DPF 1997 cc 100 Kw / 136 cv G6DA/B/D | 10/03>2/07 |
| **FORD** | GALAXY 2.0TD TDCI DPF 1997 cc 96 Kw / 130 cv AZWA | 4/06>3/10 |
| **FORD** | GALAXY 2.0TD TDCI DPF 1997 cc 103 Kw / 140 cv QXWA | 4/06> |
| **FORD** | MONDEO 2.0TD TDCI DPF 1997 cc 96 Kw / 130 cv AZBA | 6/07>3/10 |
| **FORD** | MONDEO 2.0TD TDCI DPF 1997 cc 103 Kw / 140 cv QXBA/B | 6/07> |
| **FORD** | S-MAX 2.0TD TDCI DPF 1997 cc 96 Kw / 130 cv AZWA | 4/06>6/10 |
| **FORD** | S-MAX 2.0TD TDCI DPF 1997 cc 103 Kw / 140 cv QXWA/B/C | 4/06> |
| VOLVO | C30 2.0TD DPF 1997 cc 100 Kw / 136 cv D4204T | 10/06>3/10 |
| VOLVO | C70 2.0TD DPF 1997 cc 100 Kw / 136 cv D4204T | 1/07>4/10 |
| VOLVO | S40 2.0TD DPF 1997 cc 98 Kw / 133 cv D4204T2 | 3/04>4/10 |
| VOLVO | S40 2.0TD DPF 1997 cc 100 Kw / 136 cv D4204T | 3/04>4/10 |
| VOLVO | S80 2.0TD DPF 1997 cc 100 Kw / 136 cv D4204T | 2/08> |
| VOLVO | V50 2.0TD DPF 1997 cc 98 Kw / 133 cv D4204T2 | 3/04>4/10 |
| VOLVO | V50 2.0TD DPF 1997 cc 100 Kw / 136 cv D4204T | 3/04>4/10 |
| VOLVO | V70 2.0TD DPF 1997 cc 100 Kw / 136 cv D4204T | 10/07> |

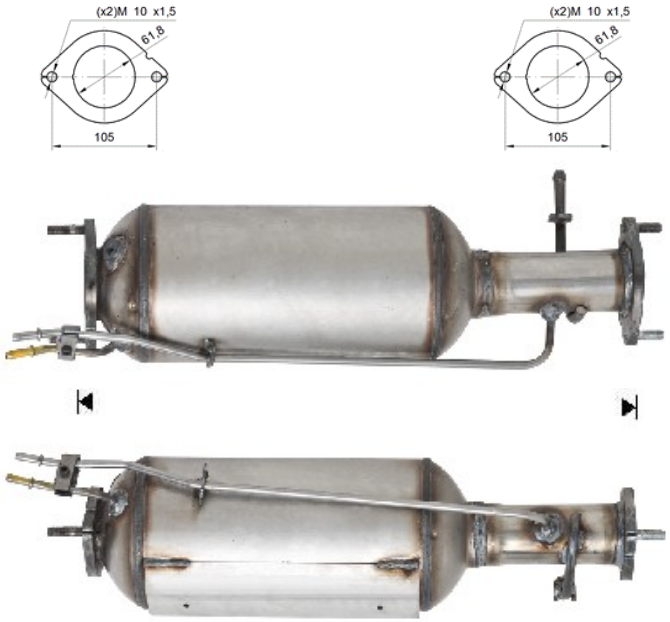
(x2)M 10 x1,5
61,8
105
(x2)M 10 x1,5
61,8
105