

FORD, VOLVO

FD1003

PK965 | OBD | 635 | 6.70

Orig.:

1306079, 1310191, 1361317, 1420068, 1422975, 1436992, 1453045, 1460442, 1463993, 1513167, 1529579
1556099, 1607729, 1683846, 1689258, 1872226, 1948720, 1948721, 31293324, 36000074, 36001001, 36002223
36002473, 36002495, 36002589, 36050309, 36050342

MARCA	MODELO	FECHA
FORD	C-MAX 2.0TD TDCI DPF 1997 cc 81 Kw / 110 cv IXDA	2/08>9/10
FORD	C-MAX 2.0TD TDCI DPF 1997 cc 100 Kw / 136 cv G6DA, G6DB, G6DD, G6DG	2/07>8/10
FORD	FOCUS 2.0TD TDCI DPF 1997 cc 81 Kw / 110 cv IXDA	12/07>7/11
FORD	FOCUS 2.0TD TDCI DPF 1997 cc 100 Kw / 136 cv G6DA, G6DB, G6DD, G6DG	9/04>9/12
FORD	FOCUS 2.0TD TDCI DPF Power shift 1997 cc 100 Kw / 136 cv G6DG	12/07>8/10
FORD	FOCUS C-MAX 2.0TDI DPF 1997 cc 98 Kw / 133 cv G6DC/E	10/03>2/07
FORD	**FOCUS C-MAX 2.0TD TDCI DPF 1997 cc 100 Kw / 136 cv G6DA/B/D**	10/03>2/07
FORD	GALAXY 2.0TD TDCI DPF 1997 cc 96 Kw / 130 cv AZWA	4/06>3/10
FORD	GALAXY 2.0TD TDCI DPF 1997 cc 103 Kw / 140 cv QXWA	4/06>
FORD	MONDEO 2.0TD TDCI DPF 1997 cc 96 Kw / 130 cv AZBA	6/07>3/10
FORD	MONDEO 2.0TD TDCI DPF 1997 cc 103 Kw / 140 cv QXBA/B	6/07>
FORD	S-MAX 2.0TD TDCI DPF 1997 cc 96 Kw / 130 cv AZWA	4/06>6/10
FORD	S-MAX 2.0TD TDCI DPF 1997 cc 103 Kw / 140 cv QXWA/B/C	4/06>
VOLVO	C30 2.0TD DPF 1997 cc 100 Kw / 136 cv D4204T	10/06>3/10
VOLVO	C70 2.0TD DPF 1997 cc 100 Kw / 136 cv D4204T	1/07>4/10
VOLVO	S40 2.0TD DPF 1997 cc 98 Kw / 133 cv D4204T2	3/04>4/10
VOLVO	S40 2.0TD DPF 1997 cc 100 Kw / 136 cv D4204T	3/04>4/10
VOLVO	S80 2.0TD DPF 1997 cc 100 Kw / 136 cv D4204T	2/08>
VOLVO	V50 2.0TD DPF 1997 cc 98 Kw / 133 cv D4204T2	3/04>4/10
VOLVO	V50 2.0TD DPF 1997 cc 100 Kw / 136 cv D4204T	3/04>4/10
VOLVO	V70 2.0TD DPF 1997 cc 100 Kw / 136 cv D4204T	10/07>

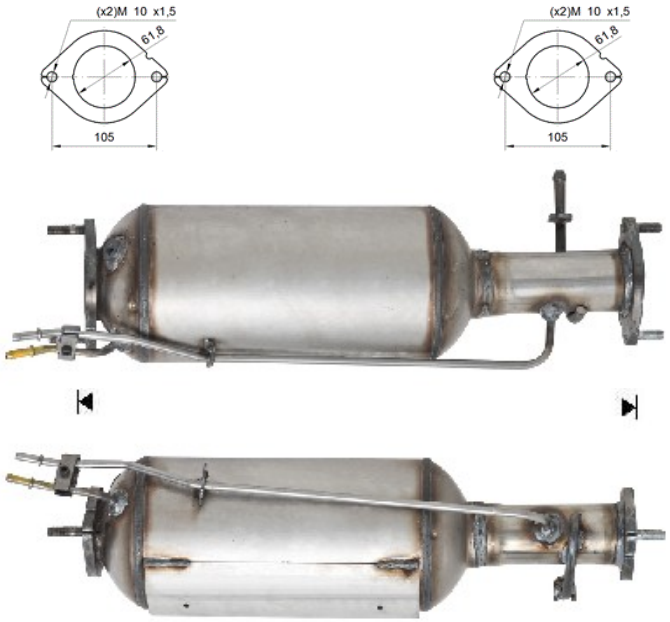
(x2)M 10 x1,5
61,8
105
(x2)M 10 x1,5
61,8
105