CITROËN, FIAT, OPEL, PEUGEOT

# FR5310

KIT PK1457 | OBD | mm. 1380 | Kg. 12.30 | Euro 6

Orig.:

1393927080, 1640323780, 1642547880
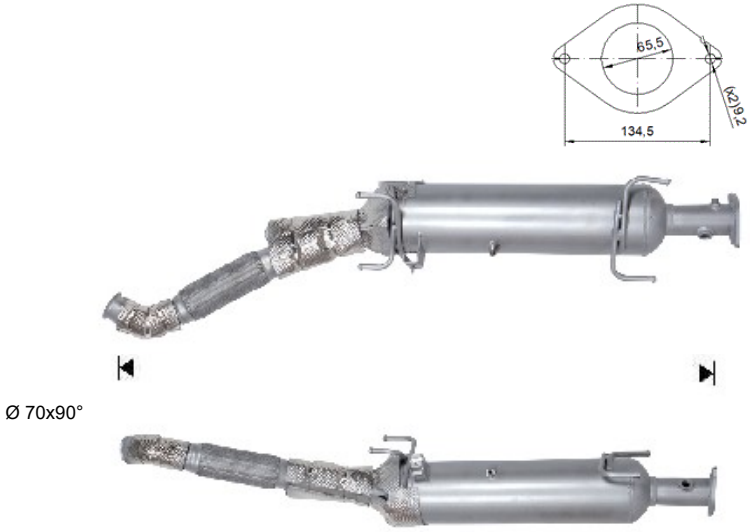
| MARCA | MODELO | FECHA |
|---|---|---|
| **CITROËN** | JUMPER 2.2TD HDI DPF 2179 cc 88 Kw / 120 cv DW12RUE (4HA) | 8/19>9/21 |
| **CITROËN** | **JUMPER 2.2TD HDI DPF 2179 cc 103 Kw / 140 cv DW12RUD (4HB)** | 8/19>9/21 |
| **CITROËN** | JUMPER 2.2TD HDI DPF 2179 cc 121 Kw / 165 cv DW12RUC (4HH) | 8/19>9/21 |
| FIAT | DUCATO 2.2TD MJTD DPF 2184 cc 88 Kw / 120 cv 46348913, 46349131 | 7/21>5/22 |
| FIAT | DUCATO 2.2TD MJTD DPF 2184 cc 103 Kw / 140 cv 46348913, 46349131 | 7/21>5/22 |
| FIAT | DUCATO 2.2TD MJTD DPF 2184 cc 118 Kw / 160 cv 46348913, 46349131 | 7/21>5/22 |
| FIAT | DUCATO 2.2TD MJTD DPF 2184 cc 132 Kw / 180 cv 46348913, 46349131 | 7/21>5/22 |
| OPEL | MOVANO 2.2TD CDTI DPF 2179 cc 88 Kw / 120 cv DW12RUE | 9/20>9/21 |
| OPEL | MOVANO 2.2TD CDTI DPF 2179 cc 103 Kw / 140 cv DW12RUD | 9/20>9/21 |
| OPEL | MOVANO 2.2TD CDTI DPF 2179 cc 121 Kw / 165 cv DW12RUC | 9/20>9/21 |
| PEUGEOT | BOXER 2.2TD HDI DPF 2179 cc 88 Kw / 120 cv DW12RUE (4HA) | 7/19>9/21 |
| PEUGEOT | BOXER 2.2TD HDI DPF 2179 cc 103 Kw / 140 cv DW12RUD (4HB) | 7/19>9/21 |
| PEUGEOT | BOXER 2.2TD HDI DPF 2179 cc 121 Kw / 165 cv DW12RUC (4HH) | 7/19>9/21 |