AUDI

# FM5215Q

PK1426 350 8.30

Orig.:

04L131601TX, 04L131669HX, 04L131670SX

| MARCA | MODELO | FECHA |
|---|---|---|
| **AUDI** | A4 30 2.0TDI DPF 1968 cc 90 Kw / 122 cv DEUC | 5/16>10/19 |
| **AUDI** | A4 2.0TDI DPF 1968 cc 100 Kw / 136 cv CSUB, DEUB | 11/12>10/19 |
| **AUDI** | A4 2.0TDI DPF 1968 cc 110 Kw / 150 cv CSUA | 11/12>12/15 |
| **AUDI** | A4 35 2.0TDI DPF 1968 cc 110 Kw / 150 cv CZHA, DEUA | 5/15> |
| **AUDI** | A4 2.0TDI DPF 1968 cc 120 Kw / 163 cv CNHC | 11/12>12/15 |
| **AUDI** | A4 2.0TDI DPF 1968 cc 140 Kw / 190 cv CNHA | 9/13>12/15 |
| **AUDI** | **A4 40 2.0TDI DPF 1968 cc 140 Kw / 190 cv DESA, DETA, DFVA** | 5/15> |
| **AUDI** | A4 Quattro 2.0TDI DPF 1968 cc 100 Kw / 136 cv CSUB, DEUB | 9/09>7/18 |
| **AUDI** | A4 Quattro 2.0TDI DPF 1968 cc 110 Kw / 150 cv CSUA, DEUA | 11/11>10/19 |
| **AUDI** | A4 Quattro 2.0TDI DPF 1968 cc 120 Kw / 163 cv DETB | 5/16>10/19 |
| **AUDI** | A4 Quattro 2.0TDI DPF 1968 cc 140 Kw / 190 cv CNHA, DESA, DETA, DFVA | 9/13>9/20 |
| **AUDI** | A4 Quattro 40 2.0TDI DPF 1968 cc 140 Kw / 190 cv DESA, DETA, DFVA | 9/15> |
| **AUDI** | A5 2.0TDI DPF 1968 cc 100 Kw / 136 cv CSUB, DEUB | 11/11>8/18 |
| **AUDI** | A5 2.0TDI DPF 1968 cc 110 Kw / 150 cv CSUA | 5/13>12/19 |
| **AUDI** | A5 35 2.0TDI DPF 1968 cc 110 Kw / 150 cv CZHA, DEUA | 1/17>2/20 |
| **AUDI** | A5 2.0TDI DPF 1968 cc 120 Kw / 163 cv CNHC | 11/11>1/17 |
| **AUDI** | A5 2.0TDI DPF 1968 cc 140 Kw / 190 cv CNHA | 9/13>1/17 |
| **AUDI** | A5 40 2.0TDI DPF 1968 cc 140 Kw / 190 cv DESA, DETA | 6/16> |
| **AUDI** | A5 Quattro 2.0TDI DPF 1968 cc 110 Kw / 150 cv CSUA, DEUA | 5/17>2/20 |
| **AUDI** | A5 Quattro 2.0TDI DPF 1968 cc 140 Kw / 190 cv CNHA | 9/13>1/17 |
| **AUDI** | A5 Quattro 40 2.0TDI DPF 1968 cc 140 Kw / 190 cv DESA, DETA | 8/16> |
| **AUDI** | A6 2.0TDI DPF 1968 cc 100 Kw / 136 cv CSUB, DDCB | 1/12>9/18 |
| **AUDI** | A6 2.0TDI DPF 1968 cc 110 Kw / 150 cv CSUA | 9/14>9/18 |
| **AUDI** | A6 2.0TDI DPF 1968 cc 140 Kw / 190 cv CNHA, CZJA, DDDA | 11/13>9/18 |
| **AUDI** | A6 Quattro 2.0TDI DPF 1968 cc 140 Kw / 190 cv CNHA, DDDA | 4/15>9/18 |
| **AUDI** | Q5 2.0TDI DPF 1968 cc 100 Kw / 136 cv CSUB, DEUB | 11/11>11/20 |
| **AUDI** | Q5 2.0TDI Quattro DPF 1968 cc 100 Kw / 136 cv CSUB | 8/09>5/17 |
| **AUDI** | Q5 2.0TDI DPF 1968 cc 110 Kw / 150 cv CSUA, DEUA | 6/12>11/20 |
| **AUDI** | Q5 2.0TDI Quattro DPF 1968 cc 110 Kw / 150 cv CSUA | 11/12>5/17 |
| **AUDI** | Q5 2.0TDI Quattro DPF 1968 cc 120 Kw / 163 cv CNHC | 11/08>5/17 |
| **AUDI** | Q5 35 2.0TDI DPF Mild Hybrid 1968 cc 120 Kw / 163 cv DTNA | 4/21> |
| **AUDI** | Q5 35 2.0TDI Quattro DPF 1968 cc 120 Kw / 163 cv DETB | 6/16>11/20 |
| **AUDI** | Q5 2.0TDI DPF 1968 cc 140 Kw / 190 cv CNHA | 9/15>5/17 |
| **AUDI** | Q5 2.0TDI Quattro DPF 1968 cc 140 Kw / 190 cv CNHA | 4/14>5/17 |
| **AUDI** | Q5 40 2.0TDI Quattro DPF 1968 cc 140 Kw / 190 cv DESA, DETA | 6/16> |
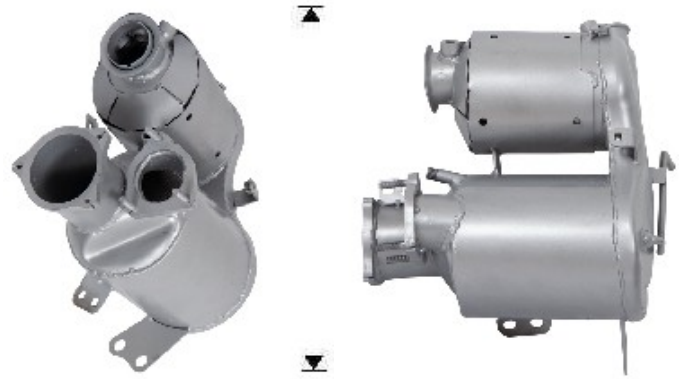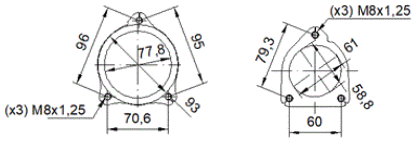
Ø 54,8 ext.
Ø 77x140°