

SEAT, SKODA, VOLKSWAGEN

37957



PK843 1370 4.30

Orig.:

6R0254500HX, 6R0254500KX, 6R0254501QX, 6R0254502AX

MARCA	MODELO	FECHA
SEAT	IBIZA 1.4i 16V 1390 cc 63 Kw / 86 cv CGGB	4/10>5/15
SEAT	IBIZA 1.6i 16V LPG 1598 cc 60 Kw / 82 cv CNKA	5/11>12/15
SKODA	FABIA 1.4i 16V 1390 cc 63 Kw / 86 cv CGGB	3/10>12/14
SKODA	FABIA 1.4i 16V LPG 1390 cc 63 Kw / 86 cv CGGB	3/10>12/14
SKODA	ROOMSTER 1.4i 16V 1390 cc 63 Kw / 86 cv CGGB	3/10>5/15
SKODA	ROOMSTER 1.4i 16V LPG 1390 cc 63 Kw / 86 cv CGGB	3/10>5/15
VOLKSWAGEN	POLO 1.4i 16V LPG 1390 cc 60 Kw / 82 cv CMAA	3/10>1/11
VOLKSWAGEN	POLO 1.4i 16V 1390 cc 63 Kw / 86 cv CGGB	9/09>5/14
VOLKSWAGEN	**POLO 1.6i 16V LPG 1598 cc 60 Kw / 82 cv CNKA**	1/10>5/14

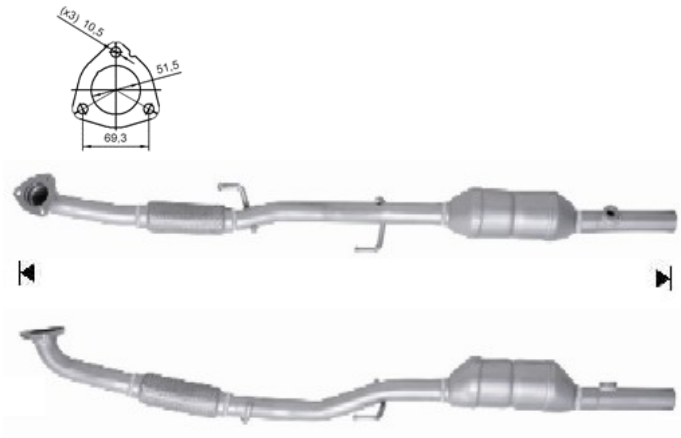

Ø 44,8 ext