SEAT, SKODA, VOLKSWAGEN

37943

PK573 | OBD | mm. 290 | Kg. 3.60 | 1

Orig.:

036253052GX
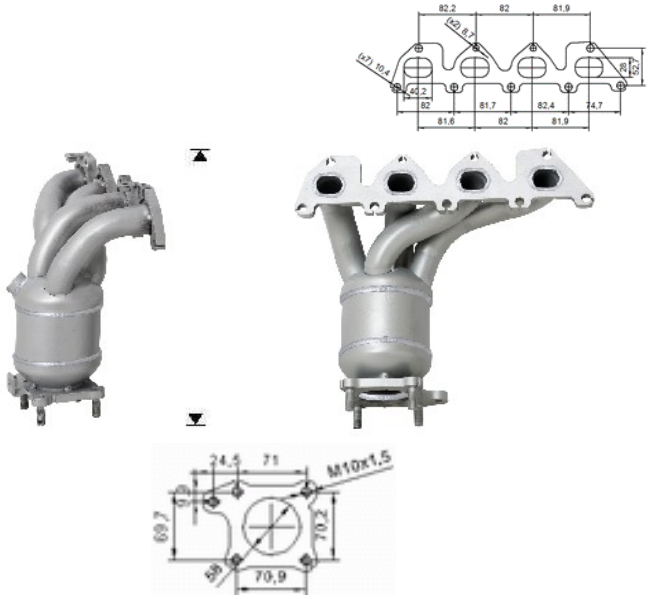
MARCA	MODELO	FECHA
SEAT	LEON 1.4i 16V 1390 cc 55 Kw / 75 cv AXP, BCA	7/00>10/05
SKODA	OCTAVIA 1.4i 16V 1390 cc 55 Kw / 75 cv AXP, BCA	8/00>10/05
VOLKSWAGEN	**BORA 1.4i 16V 1390 cc 55 Kw / 75 cv AXP, BCA**	10/00>5/05
VOLKSWAGEN	GOLF IV 1.4i 16V 1390 cc 55 Kw / 75 cv AXP, BCA	9/00>6/06