DAIHATSU, TOYOTA

95125

PK1082 | 480 | 4.45 | (1)

Orig.:

2505147010

MARCA	MODELO		FECHA
DAIHATSU	CHARADE 1.3i VVTI 16V 1329 cc 73 Kw / 99 cv 1NRFE		6/11>
TOYOTA	AURIS 1.3i VVTI 16V 1329 cc 74 Kw / 101 cv 1NRFE	(1)	9/08>
TOYOTA	**COROLLA 1.3i VVTI 16V 1329 cc 74 Kw / 101 cv 1NRFE**	(1)	12/08>
TOYOTA	URBAN CRUISER 1.3i VVTI 16V 1329 cc 74 Kw / 101 cv 1NRFE	(1)	1/09>
TOYOTA	YARIS 1.3i VVTI 16V 1329 cc 74 Kw / 101 cv 1NRFE	(1)	11/08>

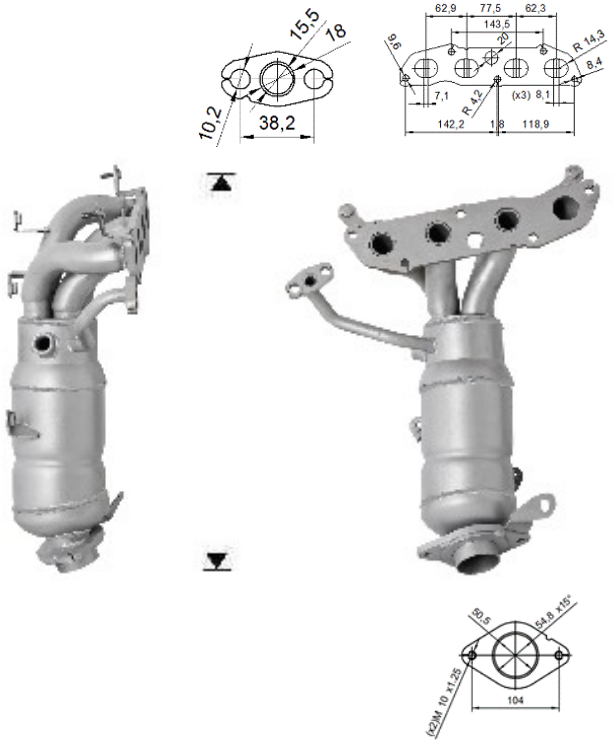

Ø 48.8 ext