SUZUKI

91089

PK919 | OBD | 480 | 5.20 | Euro 6

Orig.:

1411061M00H02, 1411061M01H02, 1411061M02H02

MARCA	MODELO	FECHA
SUZUKI	SX4 1.6i VVT 16V 1586 cc 86 Kw / 117 cv M16A	8/14>
SUZUKI	**SX4 S-Cross 1.6i VVT 16V 1586 cc 86 Kw / 117 cv M16A**	12/13>
SUZUKI	SX4 S-Cross 1.6i VVT 16V 1586 cc 88 Kw / 120 cv M16A	8/13>
SUZUKI	VITARA 1.6i VVT 16V 1586 cc 86 Kw / 117 cv M16A	5/15>
SUZUKI	VITARA 1.6i VVT 16V 1586 cc 88 Kw / 120 cv M16A	2/15>

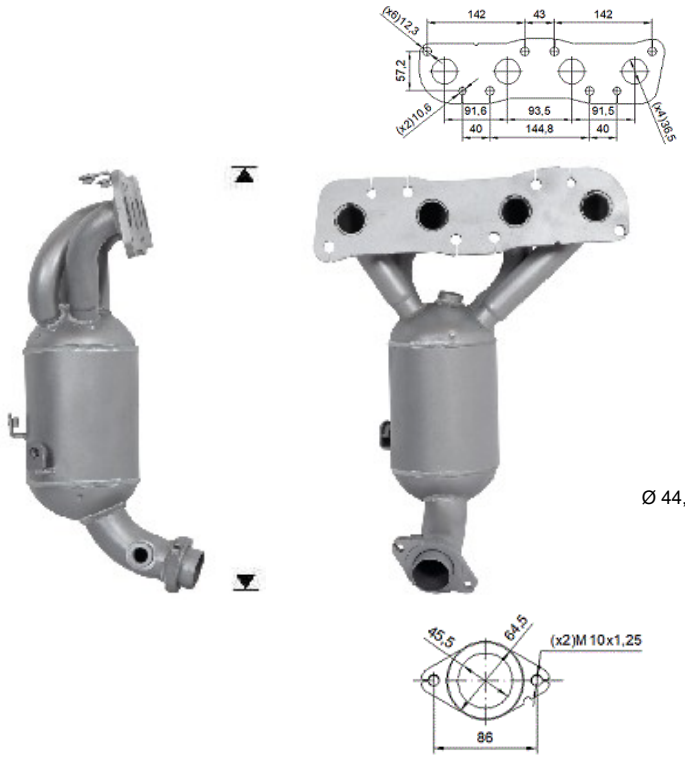

Ø 44,8 ext.