SEAT, SKODA, VOLKSWAGEN

33785

PK843 | OBD | mm. 1370 | Kg. 4.43 | 2 | Man

Orig.:

6Q0254502RX

MARCA	MODELO	FECHA
SEAT	CORDOBA 1.4i 16V 1390 cc 63 Kw / 86 cv BXW	5/06>11/09
SEAT	CORDOBA 1.6i 1598 cc 77 Kw / 105 cv BTS	11/06>11/09
SEAT	IBIZA 1.4i 16V 1390 cc 63 Kw / 86 cv BXW	5/06>4/10
SEAT	IBIZA 1.4i 16V LPG 1390 cc 63 Kw / 86 cv BXW	11/06>5/11
SEAT	IBIZA 1.6i 1598 cc 77 Kw / 105 cv BTS	11/06>9/11
SKODA	FABIA 1.4i 16V 1390 cc 59 Kw / 80 cv BUD	11/06>12/07
SKODA	FABIA 1.4i 16V 1390 cc 63 Kw / 86 cv BXW	1/07>5/11
SKODA	FABIA 1.4i 16V LPG 1390 cc 63 Kw / 86 cv BXW	1/07>5/11
SKODA	FABIA 1.6i 1598 cc 77 Kw / 105 cv BTS	4/07>9/11
SKODA	**ROOMSTER 1.4i 16V 1390 cc 63 Kw / 86 cv BXW**	7/06>5/11
SKODA	ROOMSTER 1.4i 16V LPG 1390 cc 63 Kw / 86 cv BXW	5/06>5/11
SKODA	ROOMSTER 1.6i 1598 cc 77 Kw / 105 cv BTS	7/06>9/11
SKODA	ROOMSTER 1.6i 16V LPG 1598 cc 77 Kw / 105 cv BTS	5/06>5/11
VOLKSWAGEN	POLO 1.4i 16V 1390 cc 59 Kw / 80 cv BUD	5/06>11/09
VOLKSWAGEN	POLO 1.4i 16V LPG 1390 cc 59 Kw / 80 cv BUD	7/06>11/09
VOLKSWAGEN	POLO 1.6i 1598 cc 77 Kw / 105 cv BTS	5/06>11/09

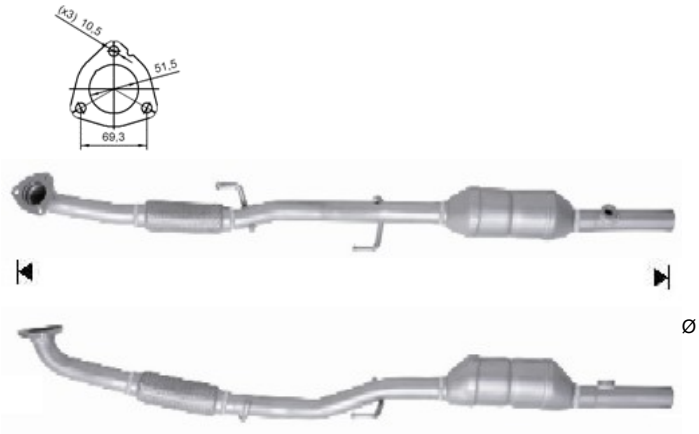

Ø 44,8 ext