SEAT, SKODA, VOLKSWAGEN

33800

PK827 | OBD | 620 | 2.65 | Euro 5

Orig.:

1K0254401PX

MARCA	MODELO	FECHA
SEAT	ALTEA 1.4i 16V 1390 cc 63 Kw / 86 cv CGGB	5/10>7/13
SEAT	**LEON 1.4i 16V 1390 cc 63 Kw / 86 cv CGGB**	3/10>8/13
SKODA	OCTAVIA 1.4i 16V 1390 cc 59 Kw / 80 cv CGGA	11/08>7/13
VOLKSWAGEN	GOLF PLUS 1.4i 16V 1390 cc 59 Kw / 80 cv CGGA	1/09>8/14
VOLKSWAGEN	GOLF VI 1.4i 16V 1390 cc 59 Kw / 80 cv CGGA	10/08>7/13

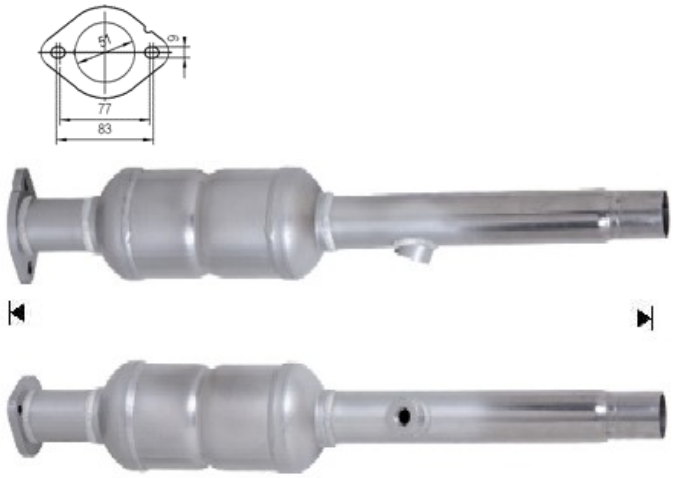

Ø 44,8 ext