ALFA ROMEO, FIAT, OPEL, SAAB

84046D

PK744 | OBD | mm. 270 | Kg. 2.40 | 1

Orig.:

51767236, 51780156, 55187620, 5854236, 60802074, 60802075

MARCA	MODELO	FECHA
ALFA ROMEO	159 1.9TD JTD DPF 1910 cc 100 Kw / 136 cv 939A8000	7/05>12/10
ALFA ROMEO	159 1.9TD JTD DPF 1910 cc 110 Kw / 150 cv 939A2000	7/05>11/06
FIAT	CROMA 1.9TD JTD DPF 1910 cc 84 Kw / 115 cv 939A7000	6/05>10/07
FIAT	CROMA 1.9TD JTD DPF 1910 cc 88 Kw / 120 cv 939A1000	6/05>10/07
FIAT	CROMA 1.9TD JTD DPF 1910 cc 100 Kw / 136 cv 939A8000	6/05>1/08
FIAT	CROMA 1.9TD JTD DPF 1910 cc 110 Kw / 150 cv 939A2000	6/05>1/08
FIAT	GRANDE PUNTO 1.9TD JTD DPF 1910 cc 84 Kw / 115 cv 939A7000	10/05>11/07
FIAT	GRANDE PUNTO 1.9TD JTD DPF 1910 cc 88 Kw / 120 cv 939A1000	10/05>11/07
FIAT	GRANDE PUNTO 1.9TD JTD DPF 1910 cc 95 Kw / 129 cv 199A5000	10/05>11/07
OPEL	ASTRA 1.9TD CDTI DPF 1910 cc 88 Kw / 120 cv Z19DTJ	3/04>12/10
OPEL	ASTRA 1.9TD CDTI DPF 1910 cc 110 Kw / 150 cv Z19DTH	3/04>12/10
OPEL	SIGNUM 1.9TD CDTI DPF 1910 cc 110 Kw / 150 cv Z19DTH	4/04>11/08
OPEL	VECTRA 1.9TD CDTI DPF 1910 cc 110 Kw / 150 cv Z19DTH	4/04>2/09
OPEL	ZAFIRA 1.9TD CDTI DPF 1910 cc 110 Kw / 150 cv Z19DTH	7/05>2/09
SAAB	9-3 1.9TD TID DPF 1910 cc 110 Kw / 150 cv Z19DTH	6/04>9/10
SAAB	**9-5 1.9TD TID DPF 1910 cc 110 Kw / 150 cv Z19DTH**	11/05>7/09
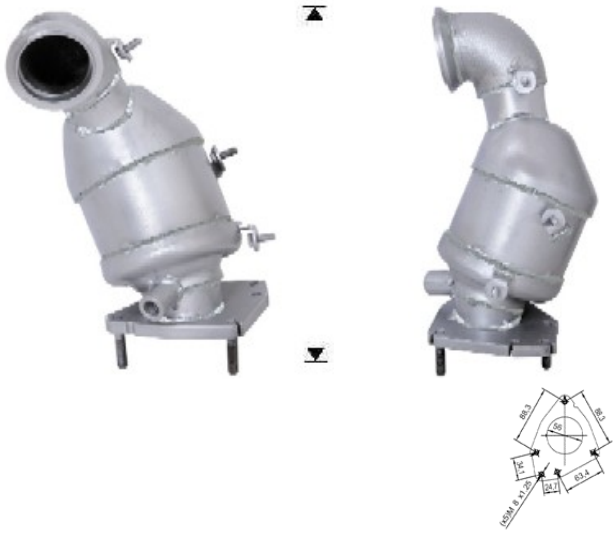
Ø 56,9 ext.