LEXUS, TOYOTA

69010

KIT	OBD		mm.	Kg.	Euro 5	Euro 6
PK1187			1280	8.85		(1)

Orig.:

174100T510, 1741037520

MARCA	MODELO		FECHA
LEXUS	CT200H 1.8i VVTi 16V Full Hybrid 1798 cc 100 Kw / 136 cv 2ZRFXE	(1)	12/12>6/20
LEXUS	CT200H 1.8i VVTi 16V Full Hybrid 1798 cc 100 Kw / 136 cv 5ZRFXE		12/10>12/13
LEXUS	**CT200H 1.8i VVTi 16V Full Hybrid 1798 cc 100 Kw / 136 cv 2ZRFXE**		12/10>12/12
TOYOTA	AURIS 1.8i 16V Full Hybrid 1798 cc 100 Kw / 136 cv 2ZRFXE	(1)	10/12>10/18

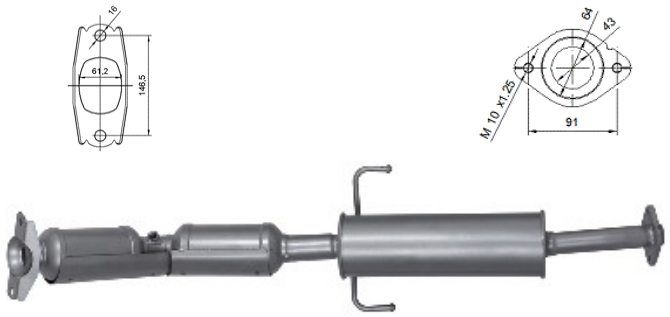



Ø 42,5 ext