FORD

20475

KIT PK1088 | OBD | mm. 810 | Kg. 5.70 | Man | Euro 5 (1) | Euro 6 (2)

Orig.:

1787285, 1831667, 1836874, 2214373, 2361518, 2381160
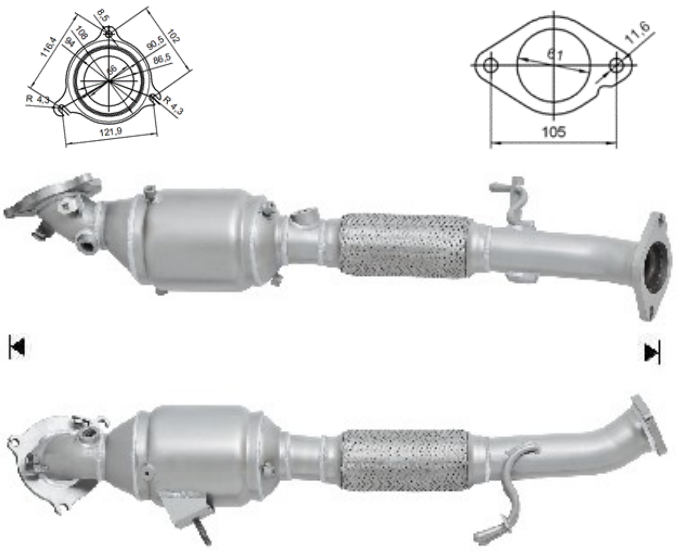
MARCA	MODELO		FECHA
FORD	KUGA 1.5Ti VCT 16V EcoBoost 1499 cc 88 Kw / 120 cv BNMA	(2)	10/14>5/18
FORD	KUGA 1.5Ti VCT 16V EcoBoost GPF 1499 cc 88 Kw / 120 cv BNMC	(2)	5/18>
FORD	**KUGA 1.5i Ti 16V EcoBoost GPF 1499 cc 110 Kw / 150 cv M8MD, M8ME**	(2)	5/18>11/19
FORD	KUGA 1.5Ti VCT 16V EcoBoost 1499 cc 110 Kw / 150 cv M8MA, M8MB, M8MC	(2)	10/14>5/18
FORD	KUGA 1.6Ti VCT 16V EcoBoost 1596 cc 110 Kw / 150 cv JQMA, JQMB	(1)	11/12>12/14