FORD

20471

PK1298 | OBD | 740 | 5.10 | Euro 5 | Euro 6 (1)

Orig.:

1779759, 1789668, 1805784, 5343783
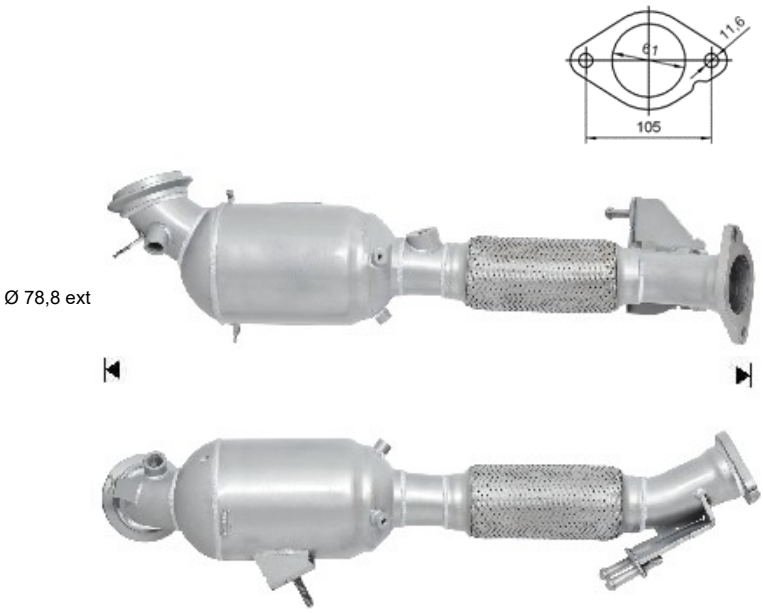
MARCA	MODELO	FECHA
FORD	FOCUS 2.0Ti-VCT 16V EcoBoost 1999 cc 184 Kw / 250 cv R9DA	6/12>7/15
FORD	**FOCUS 2.0Ti-VCT 16V EcoBoost 1999 cc 184 Kw / 250 cv R9DB, R9DC, R9DD** (1)	12/14>