BMW

45243

PK809 | OBD | 2200 | 11.00

Orig.:

18307511648, 18307521989, 18307523730, 18307525551

MARCA	MODELO	FECHA
BMW	316i 1.6i 16V 1596 cc 85 Kw / 116 cv N40B16A, N45B16A (N42, N45) E46	6/02>7/06
BMW	316i Ti Compact 1.6i 16V 1596 cc 85 Kw / 116 cv N40B16A, N45B16A (N42, N45)	6/02>2/05
BMW	316i 1.8i 16V 1796 cc 85 Kw / 116 cv N42B18A, N46B18A (N42, N46) E46	12/02>2/05
BMW	**316i Ti Compact 1.8i 16V 1796 cc 85 Kw / 116 cv N42B18A, N46B18A (N42, N46)**	12/02>2/05
BMW	318i 2.0i 16V 1995 cc 100 Kw / 136 cv N42B20A, N46B20A (N42, N46) E46	12/02>12/06
BMW	318i Ti Compact 2.0i 16V 1995 cc 100 Kw / 136 cv N42B20A, N46B20A (N42, N46)	12/02>12/04
BMW	318i 2.0i 16V 1995 cc 105 Kw / 143 cv N42B20A, N46B20A, N46B20C (N42, N46)	12/02>12/06
BMW	318i Ti Compact 2.0i 16V 1995 cc 105 Kw / 143 cv N42B20A, N46B20A (N42, N46)	12/02>2/05
BMW	318i 2.0i 16V 1995 cc 110 Kw / 150 cv N46B20A, N46B20C (N46) E46	3/04>8/06

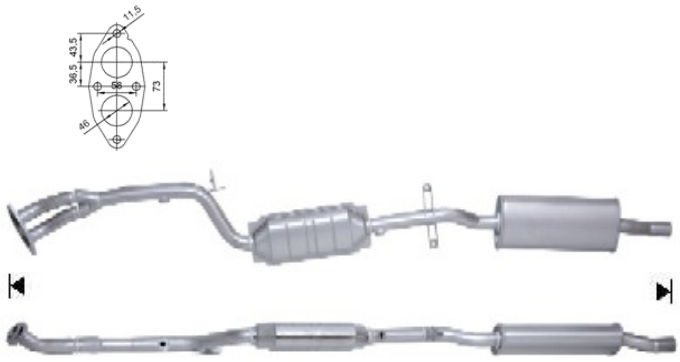

Ø 49,8 ext.